KEYENCE

Safety Light Curtain

SL-V Series

Maximum safety standard

Type4 | SIL3 | Category4 | PLe

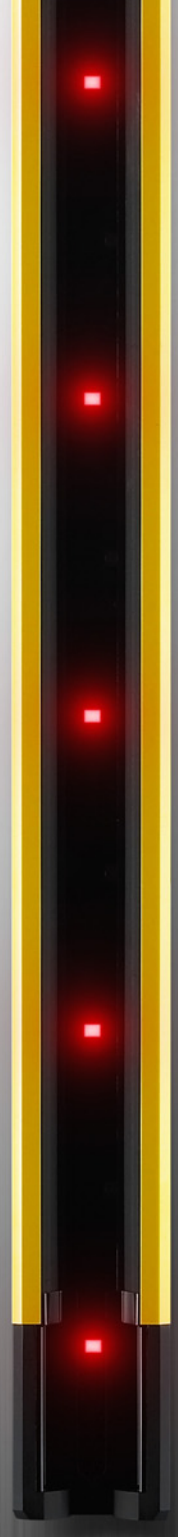

Super Slim

Super Heavy Duty

You Will SEE the Difference!

Super Slim

Super Heavy Duty

Safety Relay Terminal
SL-T11R

PC Configuration Software
SL-VH1S

Lightweight & Super Slim Body Makes Compact Installation Possible

Super Slim

World's first
Highly-Visible Indicators

SL-V Series Full Lineup

SL-VF series

SL-VH series

Additional New Safety Equipment

Safety Relay Terminal
SL-T11R

Safety Controller
SC-S11

Designed for use in tough environments

Super Heavy Duty

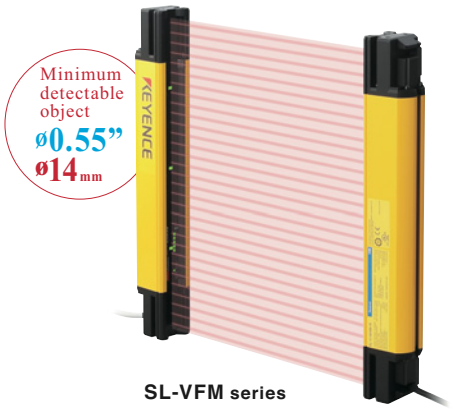

SL-VFM series

SL-VHM series

PC Configuration Software
SL-VH1S

Interface Unit
SL-V1UB

USB Cable
OP-51580
(Included with the SL-V1UB)

World’s first

Highly-Visible Indicators

The SL-V Series meets IP67 standards without the need for any additional accessories

The SL-V Series conforms to IP65 and IP67 based on IEC/JIS standards

No damage from impact

This model can be used in places where workpieces often strike the unit.

New Version Information for All SL-V Series Models

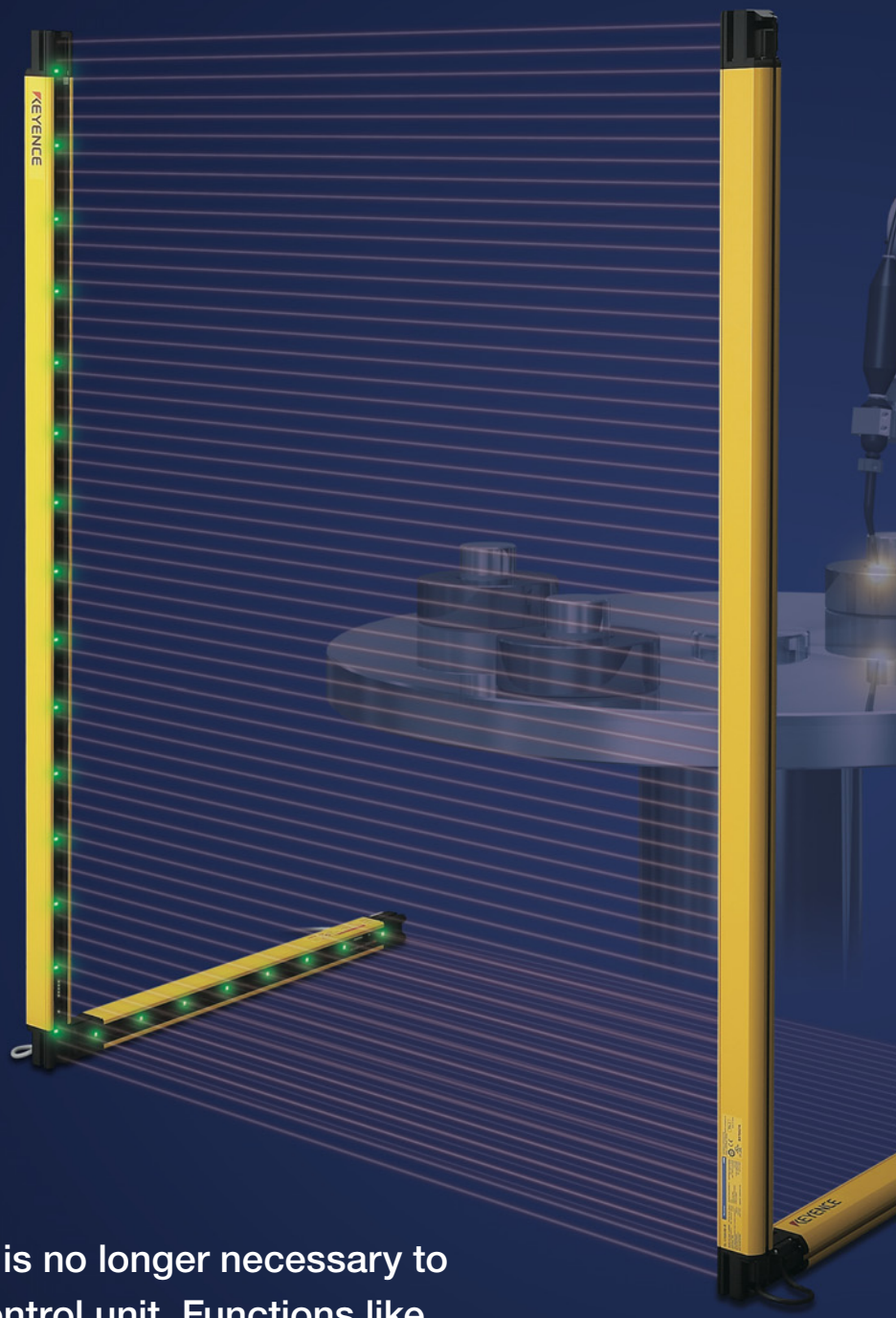

With the new functions, it is no longer necessary to purchase an additional control unit. Functions like muting and beam axis intensity monitoring that used to be difficult or impossible, are now easy to setup using the software. As a result, on-site installation time will be greatly reduced.

Programmable Muting function

Programmable Muting allows the user to customize which parts of the safety curtain are inactive. Up to three different clearance heights can be programmed so that the user can easily pass different height parts while maintaining maximum safety.

Clearance height 1
(The height of the workpiece: low)

Clearance height 2
(The height of the workpiece: high)

Fixed Blanking function

This function is used when an obstacle is always within the detection area. It makes it possible to operate a safety light curtain normally even with an obstacle present.

Reduced Resolution function

This function is used when an obstacle sometimes moves within the detection area. The output turns off only if the light is blocked in more optical axes than the set number.

The SL-VH1S PC configuration software Makes It Possible to Reduce On-Site Installation Time!

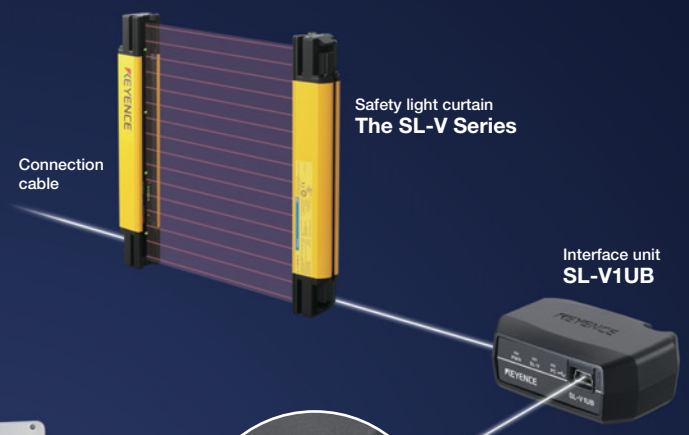

Required System Configuration

SL-VH1S

USB cable
OP-51580
(Included with the SL-V1UB)

The Configuration Software Makes it Possible to —

Monitor received light intensity of beam axes

It gives the user a visual indication of beam strength for alignment, trouble-shooting, or initial setup.

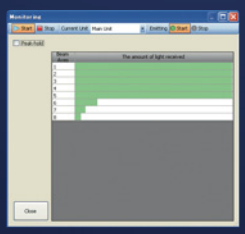

Precisely configure the Muting function

It can be used to choose which beams are used for Muting and Blanking functions with a PC.

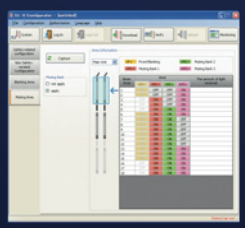

Customize the Highly-Visible Indicators

It allows the operator to select how the Highly-Visible Indicators spanning the whole curtain will light up or flash and what color they will be for different conditions. This helps the user to see the current operating status of the safety light curtain.

Configure the Override function

The SL-VH1S software can be used to adjust the time limit of the Override function from the default 60 seconds to as much as 15 minutes.

Configure the EDM function

The EDM makes it possible to monitor external devices such as contactors. The SL-V configuration software (SL-VH1S) allows the user to select whether or not to use the EDM function and to select permissible times for it.

Configure the Interlock function

Easily configure how to reset the light curtain(Interlock function) under the following two conditions.
-Upon startup: Automatic or Manual
-After an obstruction: Automatic or Manual

Safety Controller for E-STOP& ANY Safety Input

Non-Contact Safety Output / Easy Status Indicator

Non-contact safety output

Unlike conventional relay units that use mechanical contacts, the SC-S11 is free from failures caused by welded contacts. This ensures extreme durability, reducing maintenance and other costs.

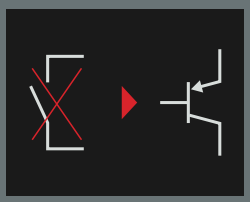

Easy-to-read indicators

Operation can be verified easily because the ON/OFF status of all inputs and outputs can be seen at a glance. Moreover, the symbols are designed to show the purpose of each terminal block clearly, helping to prevent improper wiring.

What Makes the SL-V Different?

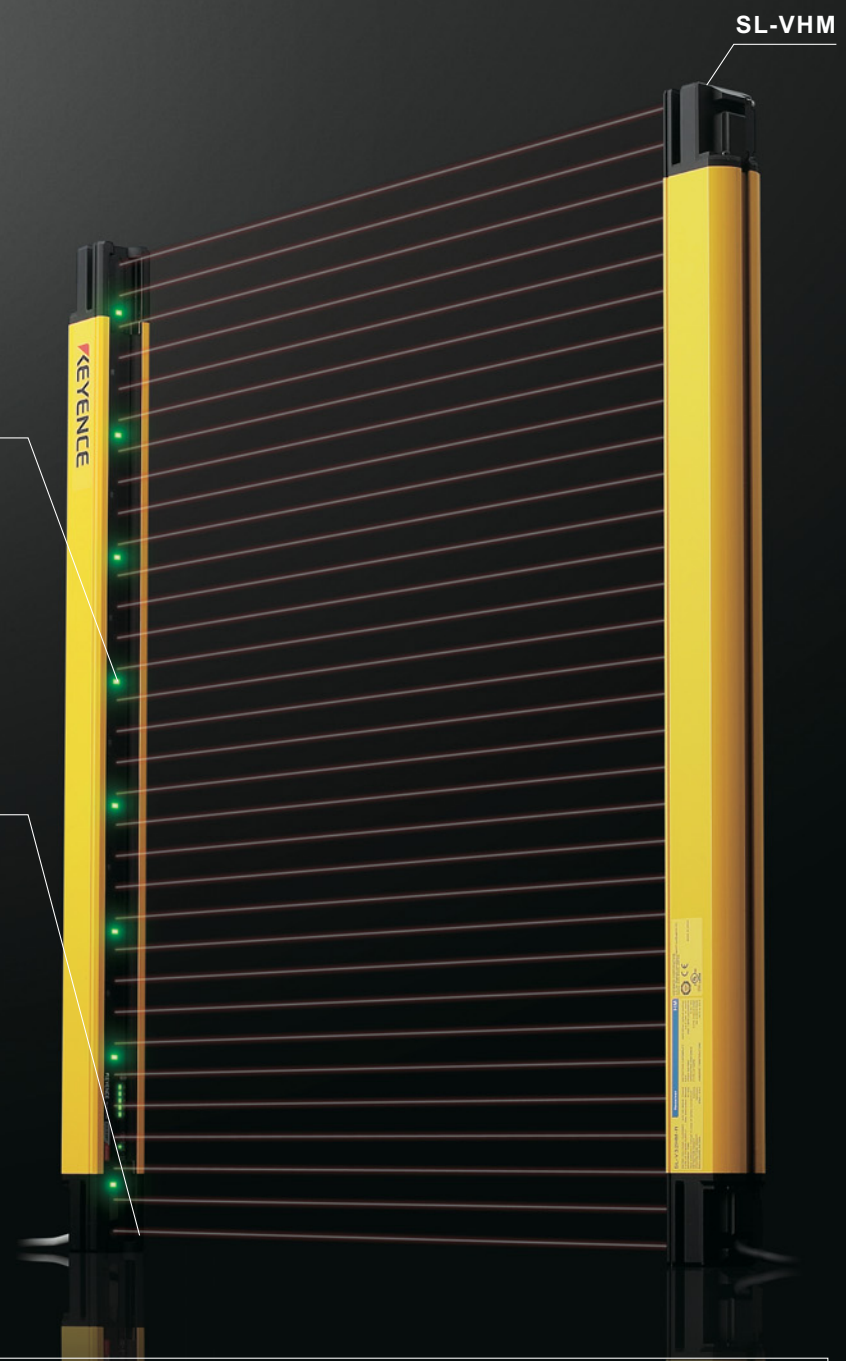

Difference 1 ▶ page 9

Highly-Visible Indicators

Difference 2 ▶ page 10

Edge-to-Edge Detection Zone

World's first

Difference 3 ▶ page 12

Super Slim & Super Heavy Duty-IP67

World's first

Difference 4 ▶ page 13 All-In-One – Built-In Controller, EDM, Muting, Blanking

Difference 5 ▶ page 14 Immediate Delivery

Difference 1 Highly-Visible Indicators

The Highly-Visible Indicators help the operator to see the current operating status of the safety light curtain.

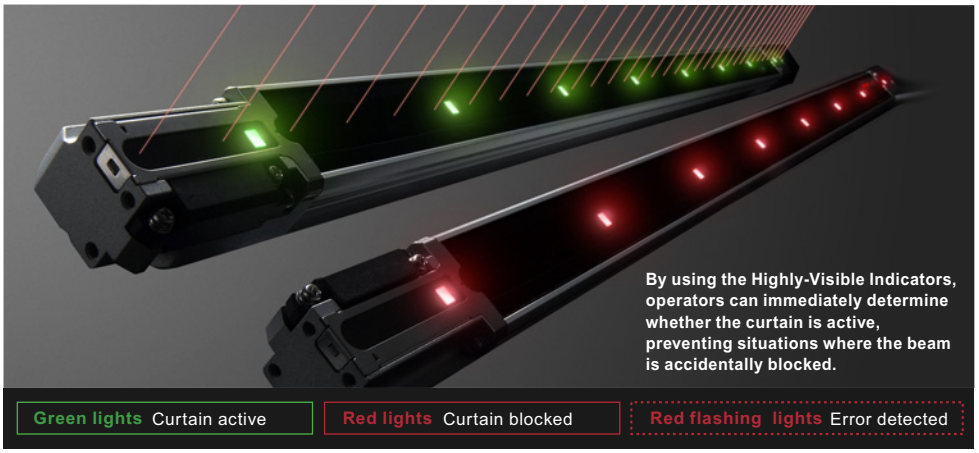

Easy Troubleshooting

The status of the safety light curtain can be easily determined by the easy-to-see LED indicators.

During operation

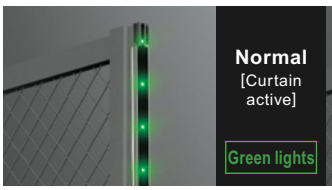

During normal operation, light is emitted properly.

The beam axes are misaligned or dirty, or the beams are blocked.

An error (such as a malfunction in an external device) has occurred.

During startup

There is an error due to wrong wiring or similar problems.

The beam axes are misaligned.

Easy Alignment

With the Highly-Visible Indicators, beam axis alignment can be performed in just three steps.

STEP 1 Align the top row

The top indicators light up red when the top beam axis is aligned.

STEP 2 Align the bottom row

All of the indicators light up red when the bottom beam axis is aligned.

STEP 3 Fine-tune the rotational direction

All of the indicators change to green when all of the beam axes are aligned.

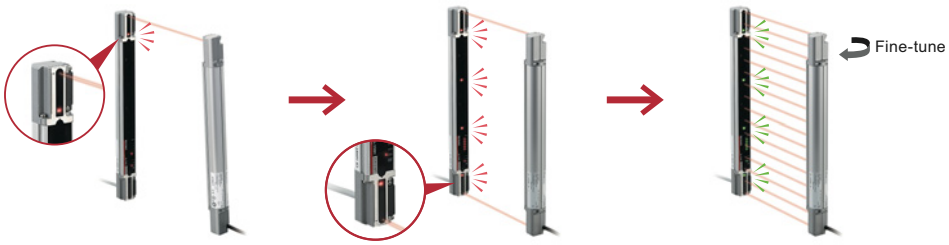

Difference 2 Edge-to-Edge Detection Zone World's first

No Dead Zone

With the first beam axis placed right along the edge and side-exit cables, detection can be performed along the entire area. Since it is not necessary to install it outside of the detection area in order to cover the dead zone, the curtain can fit neatly into the setup.

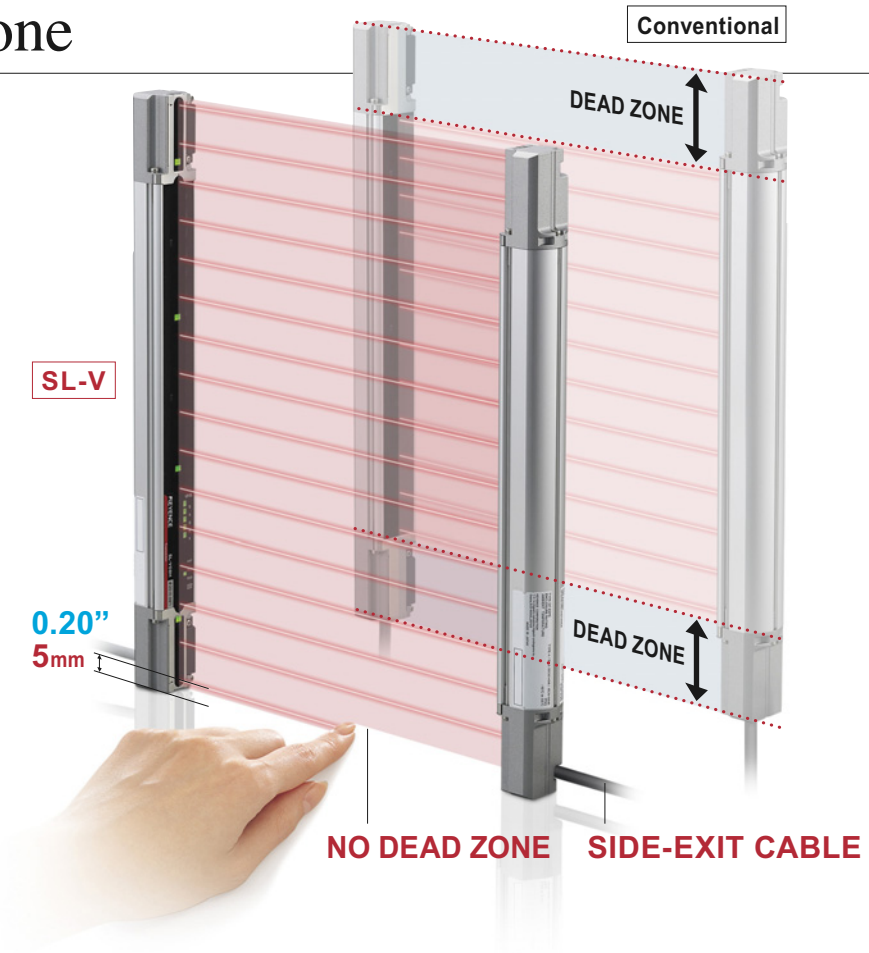

The Conventional Way	The SL-V Way
Outside mounting Externally mounted light curtains are an obstruction.	**Space saving**
Inside mounting Special "hard guards" must be fabricated to protect the dead zone at the bottom of the light curtain	The SL-V Series fits easily into equipment, eliminating dead zones.

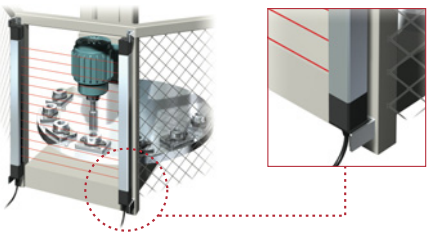

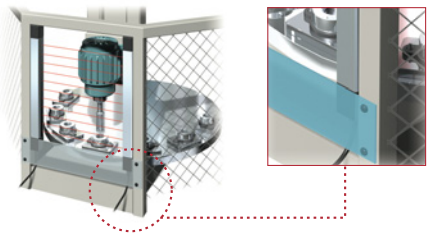

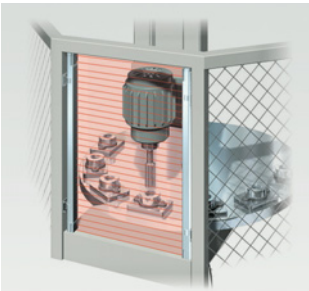

Series Connection with No Dead Zone

Unlike competitive safety light curtains which require the user to purchase special models for series connections (cascadable), all SL-V Series safety light curtains can be connected in series (up to 3 total or 240 beams) to cover “L” or “U” shaped configurations, or to guard both the front and back of a machine.

The Conventional Way	The SL-V Way
Conventional [Large dead zone]	**SL-V [No dead zone]**

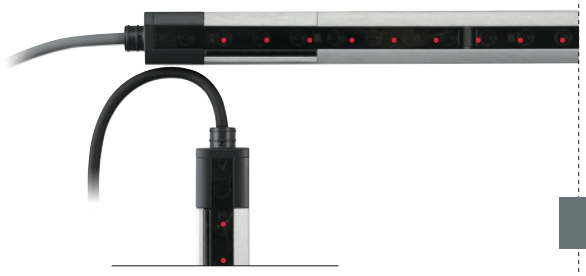

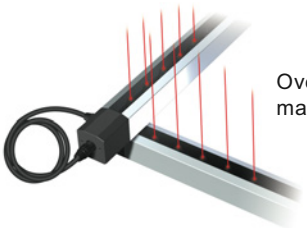

Overlapping and cables make a large protrusion

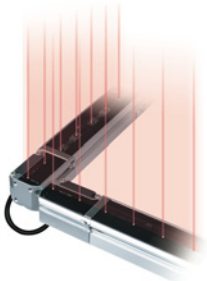

Just mount contacting ends

Serial connection diagram

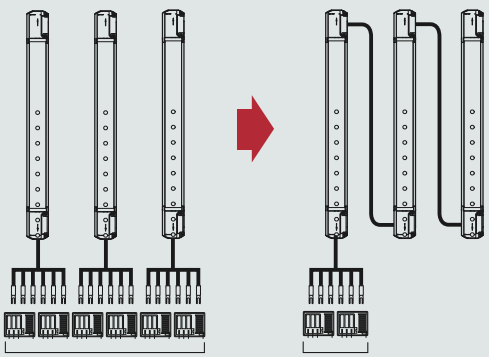

Without connecting in series, 36 wires and 6 safety relay contacts would be required to configure a “U” shaped protection zone (12 transmitter/receiver wires x 3). Connecting 3 SL-V curtains together in series eliminates two-thirds of the work, lowering costs and improving the layout and organization of the control panel.

Difference 3 Super Slim & Super Heavy Duty-IP67 World's first

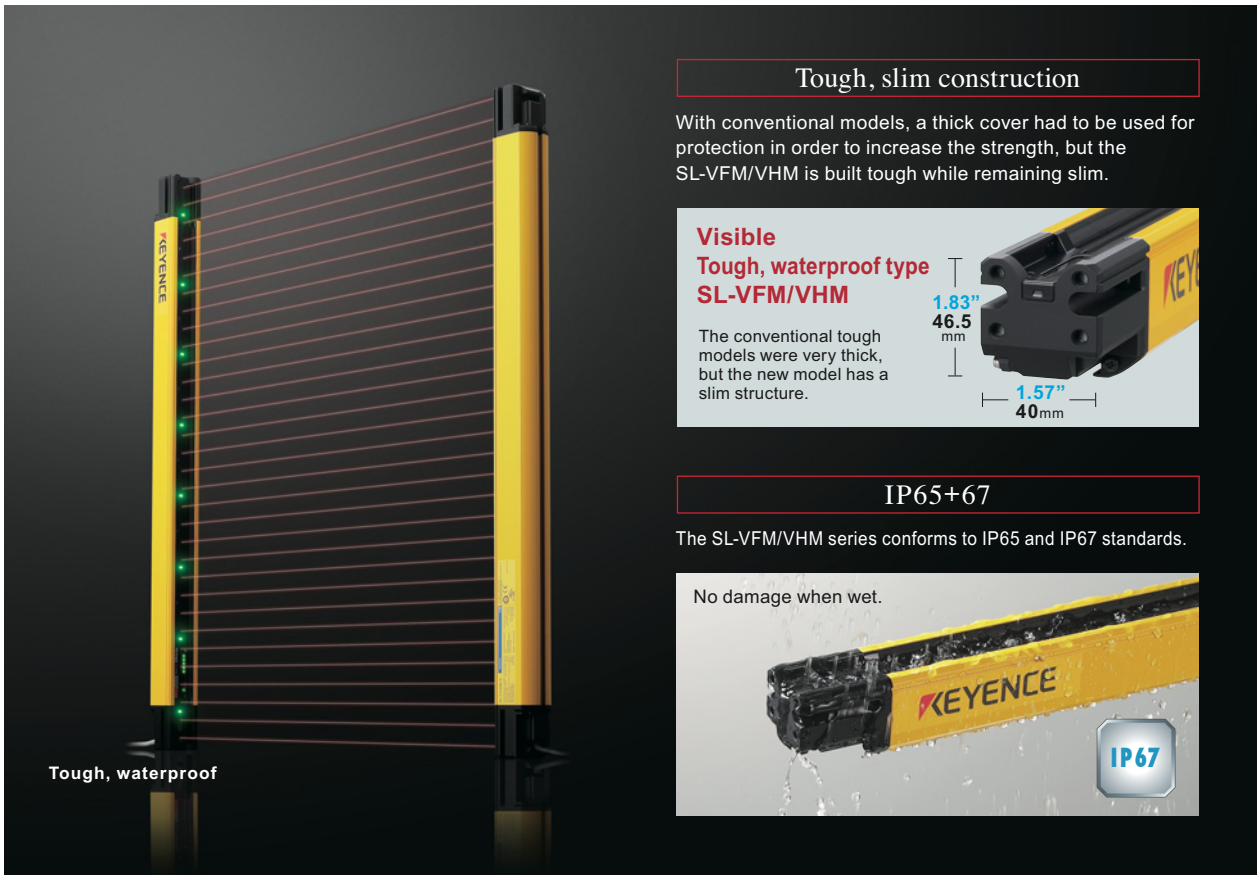

No damage from impact

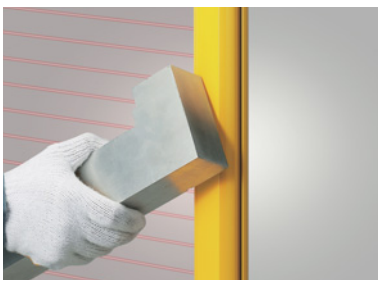

This model can be used where workpieces often strike the unit.

No misalignment from impact

Tough brackets ensure that the optical axes do not become misaligned if struck.

Replaceable front protection cover

Use an optional front protection cover to protect the face from stains or splatter.

Up to 3 units can connect in series

Series connection can be used with up to three units. This model can also be connected to the Super Slim type.

Section view

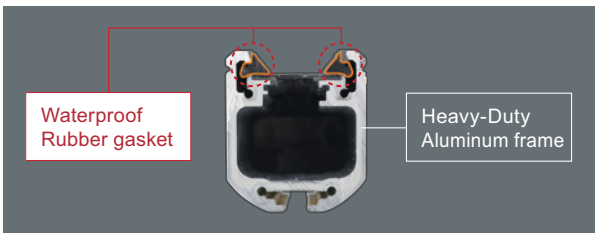

Difference 4 All-In-One - Built-in Controller, EDM, Muting, Blanking

Compliance with Category 4 Requirements without a Safety Relay Unit

With a built-in external device monitoring function, Category 4 safety systems can be assembled without a safety relay unit. The maximum capacity that can be handled with the OSSD output is a current load up to 500 mA, thus allowing direct driving of external devices*. * External devices cannot be used if the current during input exceeds 500 mA.

Reduce cost | Shorten safety distance

Perform Muting and/or Blanking without a Dedicated Controller

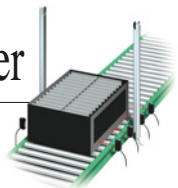

The SL-V has built-in muting and interlock functions, so a safety system can be constructed without a dedicated controller. Using the Notification Output, the SL-V status can be sent to an all-purpose PLC.

Reduce cost

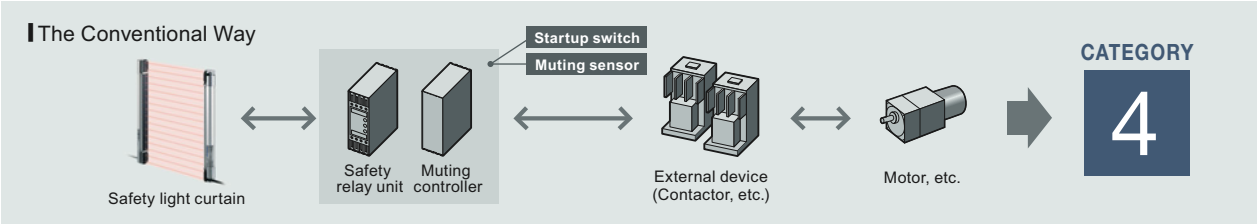

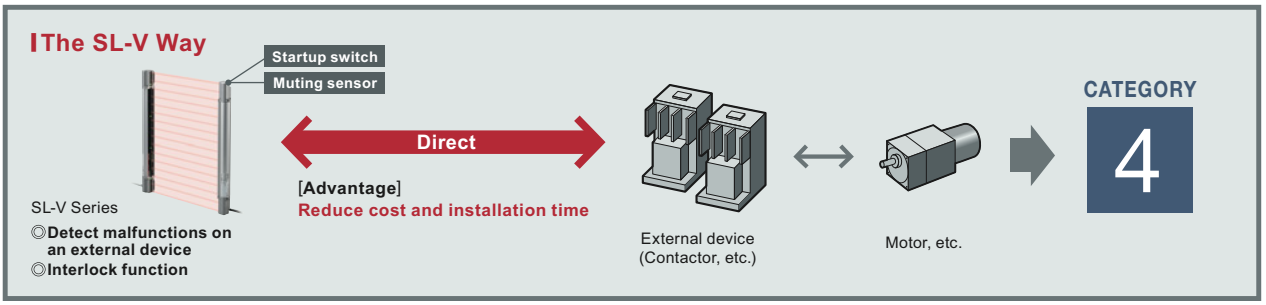

State Information Output

This function shows the current status of the safety light curtain on a PLC or other external device. The current status can be extracted in real time, so the results can be displayed on an HMI and external lights and the error history saved.

Error cause analysis | Control interlock

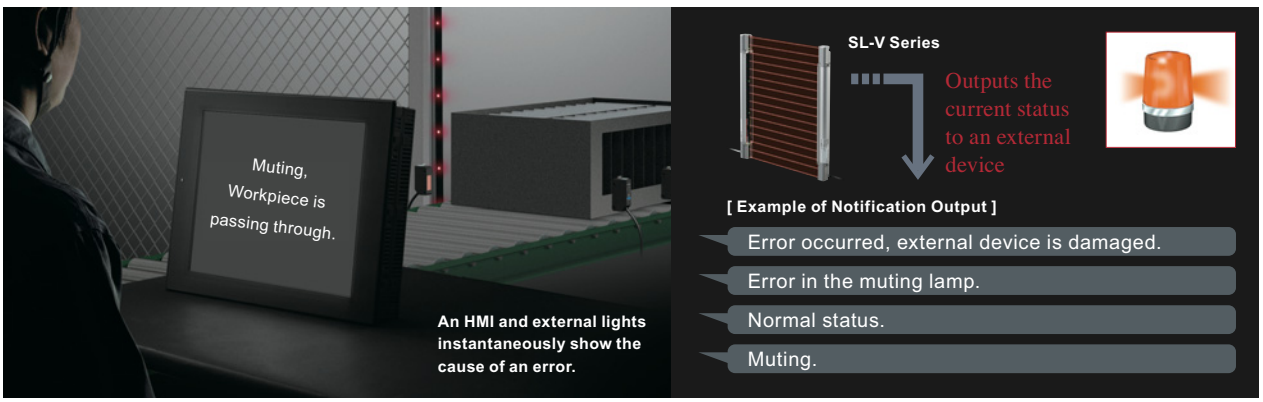

Wireless Interference Reduction

In a workplace where multiple lines are in a row, multiple safety light curtains are also used. In this situation, the safety light curtains can interfere with each other, thus making operations unstable. The SL-V includes an automatic interference reduction function to stabilize operations without special wiring.

Eliminate the cause of short-term breakdowns

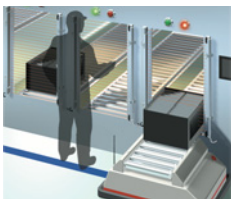

Worker penetration is prevented at a row of parallel pickup windows.

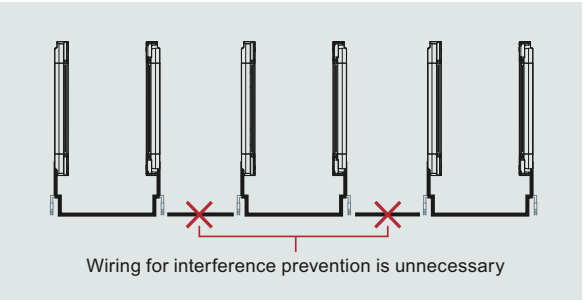

Curtain Lengths of up to 2390mm (94.09”)

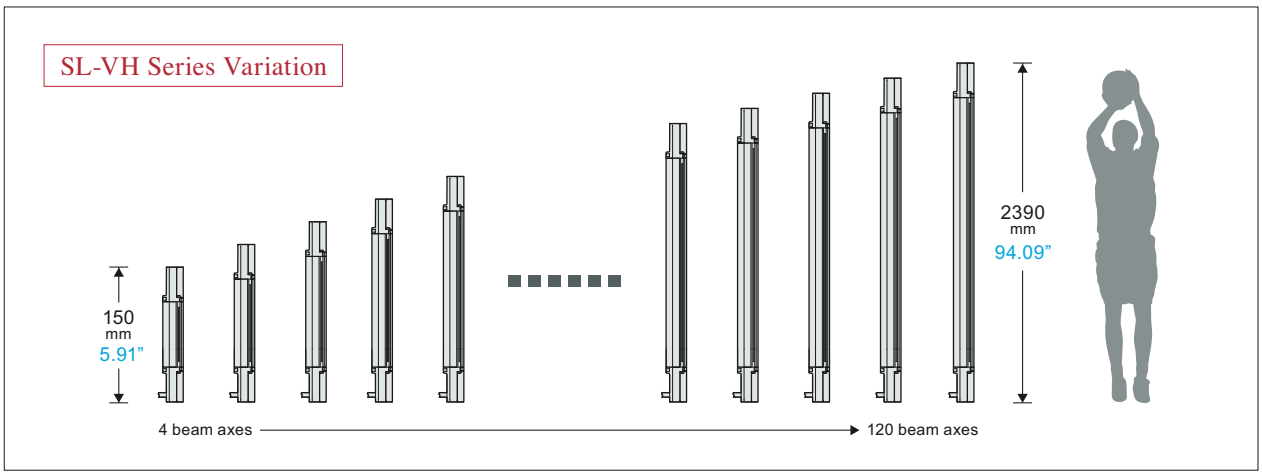

Difference 5 Immediate Delivery

Same-day shipping is possible

(*For orders received by 4:00pm CST)

Easy to configure!
Introducing the user-friendly safety relay

1. Quick Connector | **2. Replaceable Relay** | **3. Dedicated Power Supply**

SL-T11R Type4 Safety Relay Terminal

The SL-T11R combines all of the features necessary to build a Category 4 compatible safety circuit into a single unit.
This makes it possible to dramatically reduce the amount of time and labor required by complex circuit design processes.
It also boasts quick connectors that simplify the wiring process involved in connecting the relay to the light curtain itself.
The SL-T11R eliminates the need for specialized knowledge about safety circuits.

Quick Connector

The safety light curtain is connected via a quick connector, eliminating the danger of wiring mistakes and reducing the amount of time and labor required for wiring.

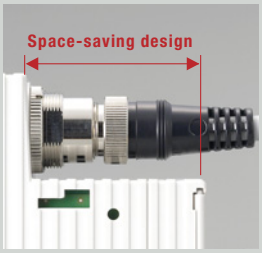

Space-saving

The SL-T11R case design ensures that the connectors do not extend outside of the unit's footprint, helping to save space inside the control panel.

Replaceable Relay

The relay board (OP-84388) can be replaced without removing any wires which eliminates time loss and potential connection mistakes during board rewiring.

*The terminal unit can also be removed separately.

SL-U2 AC Power Supply

The SL-U2 dedicated power supply directly connects to the side of the GL-T11R, providing power to the entire light curtain setup without the need for additional wiring.

Selecting a Safety Light Curtain

Use the following steps to select the optimum SL-V Series configuration for your application.

step 1 Select the model

step 2 Select the detection capability

step 3 Select the length

step 4 Select the mounting brackets

step 5 Select the cable

step 6 Select the protection options as necessary
*This step is optional.

step 7 Select the controller
*This step is optional.

step 8 Select the PC Configuration Software
*This step is optional.

SL-V Series LINE-UP

step 1 2 3 Light Curtain

Finger Detection
SL-VF series
Detection capability
ø0.55" ø14mm

Heavy Duty
SL-VFM series
Detection capability
ø0.55" ø14mm

Hand Detection
SL-VH series
Detection capability
ø0.98" ø25mm

Heavy Duty
SL-VHM series
Detection capability
ø0.98" ø25mm

step 4 Mounting Bracket

step 5 Cable

step 6 Protection Options

Protection Bar

Front Protection Cover

step 7 Controller

Type 4 Safety Relay Terminal dedicated for the SL-V Series
SL-T11R

Safety Controller
SC-S11

step 8 PC Configuration Software

PC Configuration Software
SL-VH1S

Interface Unit
SL-V1UB

USB Cable
OP-51580
(Included with the SL-V1UB)

step 1 Select the Model

Select the Super Slim or Super Heavy Duty depending on the operating environment.

For a normal environment

Super Slim

Select the detection capability (ø0.55" ø14mm/ ø0.98" ø25 mm).

Go to step 2.

For operations with shock or wet environments

Super Heavy Duty

Select the detection capability (ø0.55" ø14mm/ ø0.98" ø25mm)

Go to step 3: SL-VFM/VHM.

step 2 Select the detection capability for the model

Select the value according to the distance from the source of the hazard.

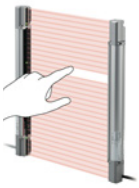

For a short distance to the hazard

Detection capability: ø0.55" ø14 mm (Finger detection)

Beam axis pitch of 0.39" 10 mm. This is the safest type available.

Intrusion detection

Go to step 3: SL-VF.

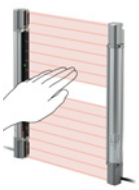

For the most widely used, standard type

Detection capability: ø0.98" ø25 mm (Hand detection)

Beam axis pitch of 0.79" 20 mm.

Intrusion detection

Go to step 3: SL-VH.

step 3 Select the length

Select the necessary length from the specifications chart for the series selected in step 1 and step 2.

▼ If "ø0.55" 14 mm (Finger detection)" was selected in step 2

SL-VF Series
[Detection capability: ø0.55" ø14 mm]

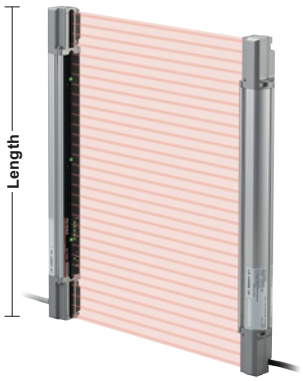

Beam axis pitch	Detection capability
0.39" 10 mm	ø0.55" ø14 mm

The column to the left of the selected length is the model for the appropriate safety light curtain.

Model	Length (inch mm)	No. of axes	Detection height (inch mm)	Protection height (inch mm)	Operating distance (foot m)
SL-V23F	9.06" 230	23	8.66" 220	9.61" 244	0.3' to 23.0' 0.1 to 7
SL-V31F	12.20" 310	31	11.81" 300	12.76" 324	
SL-V39F	15.35" 390	39	14.96" 380	15.91" 404	
SL-V47F	18.50" 470	47	18.11" 460	19.06" 484	
SL-V55F	21.65" 550	55	21.25" 540	22.20" 564	
SL-V63F	24.80" 630	63	24.41" 620	25.35" 644	
SL-V71F	27.95" 710	71	27.56" 700	28.50" 724	
SL-V79F	31.10" 790	79	30,71" 780	31.65" 804	
SL-V87F	34.25" 870	87	33.86" 860	34.80" 884	
SL-V95F	37.40" 950	95	37.01" 940	37.95" 964	
SL-V103F	40.55" 1030	103	40.16" 1020	41.10" 1044	
SL-V111F	43.70" 1110	111	43.31" 1100	44.25" 1124	
SL-V119F	46.85" 1190	119	46.46" 1180	47.40" 1204	
SL-V127F	50.00" 1270	127	49.61" 1260	50.55" 1284	

Go to step 4.

▼ If "ø0.98" 25 mm (Hand detection)" was selected in step 2

SL-VH Series
[Detection capability: ø0.98" ø25 mm]

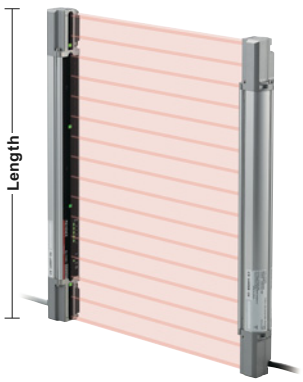

Beam axis pitch	Detection capability
0.79" 20 mm	ø0.98" ø25 mm

The column to the left of the selected length is the model for the appropriate safety light curtain.

Model	Length (inch mm)	No. of axes	Detection height (inch mm)	Protection height (inch mm)	Operating distance (foot m)
SL-V08H	5.91" 150	8	5.51" 140	7.28" 185	0.3' to 29.5' 0.1 to 9
SL-V12H	9.06" 230	12	8.66" 220	10.43" 265	
SL-V16H	12.20" 310	16	11.81" 300	13.58" 345	
SL-V20H	15.35" 390	20	14.96" 380	16.73" 425	
SL-V24H	18.50" 470	24	18.11" 460	19.88" 505	
SL-V28H	21.65" 550	28	21.26" 540	23.03" 585	
SL-V32H	24.80" 630	32	24.41" 620	26.18" 665	
SL-V36H	27.95" 710	36	27.56" 700	29.33" 745	
SL-V40H	31.10" 790	40	30.71" 780	32.48" 825	
SL-V44H	34.25" 870	44	33.86" 860	35.63" 905	
SL-V48H	37.40" 950	48	37.01" 940	38.78" 985	
SL-V52H	40.55" 1030	52	40.16" 1020	41.93" 1065	
SL-V56H	43.70" 1110	56	43.31" 1100	45.08" 1145	
SL-V60H	46.85" 1190	60	46.46" 1180	48.23" 1225	
SL-V64H	50.00" 1270	64	49.61" 1260	51.38" 1305	
SL-V72H	56.30" 1430	72	55.91" 1420	57.68" 1465	0.3' to 23.0' 0.1 to 7
SL-V80H	62.60" 1590	80	62.20" 1580	63.98" 1625	
SL-V88H	68.90" 1750	88	68.50" 1740	70.28" 1785	
SL-V96H	75.20" 1910	96	74.80" 1900	76.57" 1945	
SL-V104H	81.50" 2070	104	81.10" 2060	82.87" 2105	
SL-V112H	87.80" 2230	112	87.40" 2220	89.17" 2265	
SL-V120H	94.10" 2390	120	93.70" 2380	95.47" 2425	

Go to step 4.

▼If "Super Heavy Duty" was selected in step 1

SL-VFM Series
[Super Heavy Duty
Detection capability: ø0.55" ø14 mm]

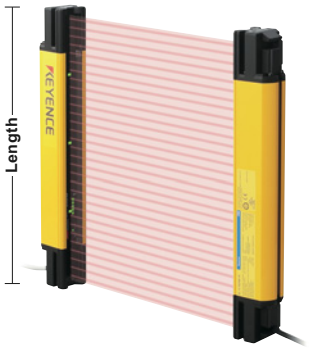

Beam axis pitch	Detection capability
0.39" 10 mm	ø0.55" ø14 mm

The column to the left of the selected length is the model for the appropriate safety light curtain.

Model	Length (inch mm)	No. of axes	Detection height (inch mm)	Protection height (inch mm)	Operating distance (foot m)
SL-V23FM	9.69" 246	23	8.66" 220	9.61" 244	0.3' to 23.0' 0.1 to 7
SL-V31FM	12.83" 326	31	11.81" 300	12.76" 324	
SL-V39FM	15.98" 406	39	14.96" 380	15.91" 404	
SL-V47FM	19.13" 486	47	18.11" 460	19.06" 484	
SL-V55FM	22.28" 566	55	21.25" 540	22.20" 564	
SL-V63FM	25.43" 646	63	24.41" 620	25.35" 644	
SL-V71FM	28.58" 726	71	27.56" 700	28.50" 724	
SL-V79FM	31.73" 806	79	30,71" 780	31.65" 804	
SL-V87FM	34.88" 886	87	33.86" 860	34.80" 884	
SL-V95FM	38.03" 966	95	37.01" 940	37.95" 964	
SL-V103FM	41.18" 1046	103	40.16" 1020	41.10" 1044	
SL-V111FM	44.33" 1126	111	43.31" 1100	44.25" 1124	
SL-V119FM	47.48" 1206	119	46.46" 1180	47.40" 1204	
SL-V127FM	50.63" 1286	127	49.61" 1260	50.55" 1284	

step4 Go to dedicated mounting brackets for the Super Heavy Duty model.

▼If "Super Heavy Duty" was selected in step 1

SL-VHM Series
[Super Heavy Duty
Detection capability: ø0.98" ø25 mm]

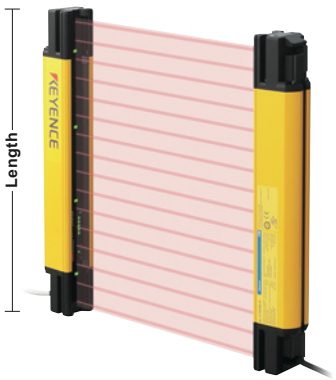

Beam axis pitch	Detection capability
0.79" 20 mm	ø0.98" ø25 mm

The column to the left of the selected length is the model for the appropriate safety light curtain.

Model	Length (inch mm)	No. of axes	Detection height (inch mm)	Protection height (inch mm)	Operating distance (foot m)
SL-V12HM	9.69" 246	12	8.66" 220	10.43" 265	0.3' to 29.5' 0.1 to 9
SL-V16HM	12.83" 326	16	11.81" 300	13.58" 345	
SL-V20HM	15.98" 406	20	14.96" 380	16.73" 425	
SL-V24HM	19.13" 486	24	18.11" 460	19.88" 505	
SL-V28HM	22.28" 566	28	21.26" 540	23.03" 585	
SL-V32HM	25.43" 646	32	24.41" 620	26.18" 665	
SL-V36HM	28.58" 726	36	27.56" 700	29.33" 745	
SL-V40HM	31.73" 806	40	30.71" 780	32.48" 825	
SL-V44HM	34.88" 886	44	33.86" 860	35.63" 905	
SL-V48HM	38.03" 966	48	37.01" 940	38.78" 985	
SL-V52HM	41.18" 1046	52	40.16" 1020	41.93" 1065	
SL-V56HM	44.33" 1126	56	43.31" 1100	45.08" 1145	
SL-V60HM	47.48" 1206	60	46.46" 1180	48.23" 1225	
SL-V64HM	50.63" 1286	64	49.61" 1260	51.38" 1305	
SL-V72HM	56.93" 1446	72	55.91" 1420	57.68" 1465	0.3' to 23.0' 0.1 to 7
SL-V80HM	63.23" 1606	80	62.20" 1580	63.98" 1625	
SL-V88HM	69.53" 1766	88	68.50" 1740	70.28" 1785	
SL-V96HM	75.83" 1926	96	74.80" 1900	76.57" 1945	

step4 Go to dedicated mounting brackets for the Super Heavy Duty model.

I Understanding the model name

SL-V 12 H M

1 2 3 4

1. Series name
2. No. of beam axes: 2 or 3 digit number. Ex: 08 = 8 axes, 64 = 64 axes
3. Detection capability: F: ø0.55" ø14 mm detection type, H: ø0.98" ø25 mm detection type
4. Special type: Unmarked: Simple function type, M: Tough, waterproof type

I Meaning of each item

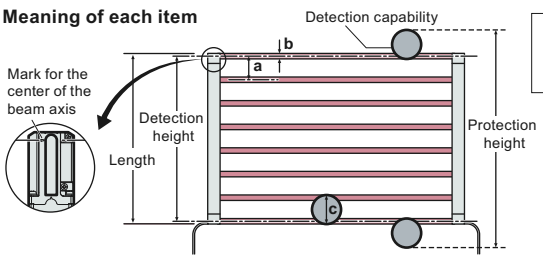

a: Beam axis pitch
b: Beam axis band
c: Detection capability

Protection height is the range of protection when the detection capability protrudes from the detection height.

step 4 Select mounting brackets

For SL-VF/VH **360° rotation standard type**

Standard mounting bracket

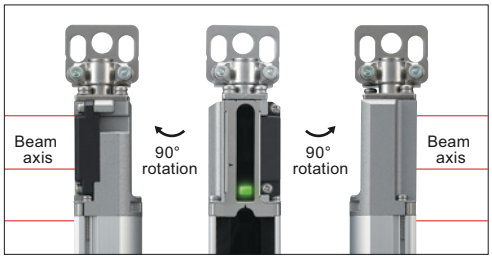

*This bracket allows 360° rotation, so it can be rotated towards the installation side.

Compact and aluminum frame for single-point installation

Standard mounting bracket J
OP-83180

Easy-to-install with elongated holes that can be used with previous installation holes

Standard mounting bracket A
OP-42347

Standard mounting bracket B
OP-42348

Standard mounting bracket C
OP-42349

Go to step 5.

For SL-VF/VH **180° rotation, space-saving type**

Thin mounting bracket

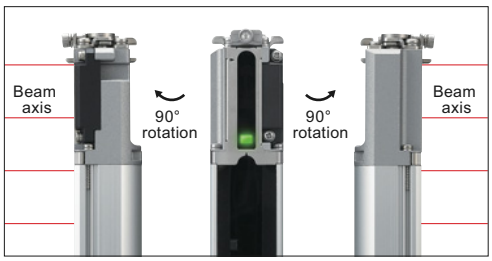

Thin mounting bracket
OP-51698

Go to step 5.

For SL-VF/VH **For mounting on corners**

L-shaped mounting bracket

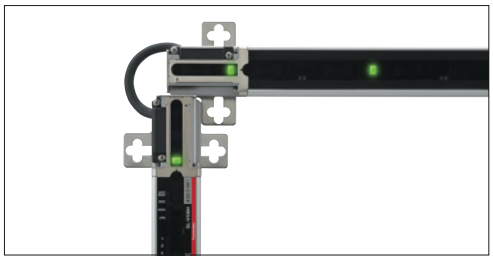

L-shaped mounting bracket
OP-42371

*Cannot be rotated.
*L-shaped installation is also possible with OP-83181 and OP-42370.

Go to step 5.

Note **Mounting brackets are sold separately.**

Note
- Mounting brackets all come two pieces to a set. Two sets are required to install a full transmitter and receiver set.
- Depending on the length, the intermediate support bracket OP-83181 or OP-42370 may also be required. For the number of required brackets, see pages 22 and 23.
- The installation screws for the mounting surface are not included. When using standard mounting brackets A/B/C/J or the L-shaped mounting bracket, M5 screws are required, and M4 screws are required for all other models. Please purchase surface mount screws separately.

For SL-VF/VH **If mounting brackets cannot be used on the top or bottom of the light curtain**

E-to-E mounting bracket

If the safety light curtain is long, intermediate support brackets or L-shaped brackets can also be used.

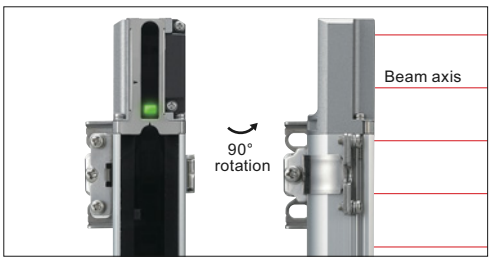

*This figure shows an example of the installation holes on the left. They can also be turned to face the right.

Minimal one side mounting

Compact E-to-E bracket
OP-83181

Firmly secured at four points.

E-to-E bracket
OP-42370

Go to step 5.

For SL-VHM **Dedicated standard mounting bracket for the Super Heavy Duty model**

Tough standard mounting bracket

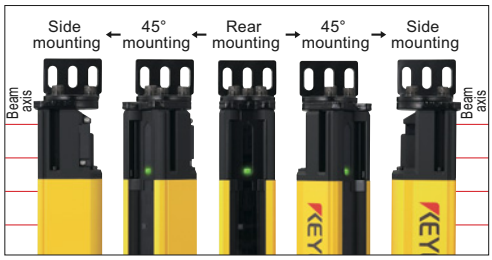

*There are five possible mounting patterns reached by changing the screw positions.

Standard mounting bracket
OP-84259

Go to step 5.

For SL-VHM **If mounting brackets cannot be used on the top or bottom of the Super Heavy Duty light curtain.**

Tough, space-saving mounting bracket

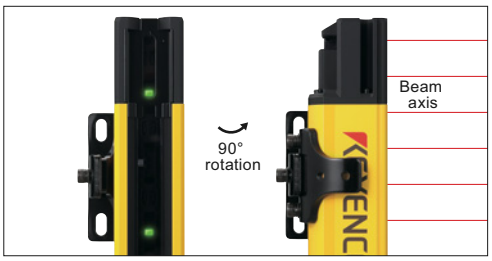

*The bracket can be rotated 90° by changing the position of the three screws.
*The figure shows an example of the installation holes facing the left. They can also be turned to face the right.

If the safety light curtain is long, intermediate support brackets or L-shaped brackets can also be used.

Space-saving mounting bracket
OP-84260

Go to step 5.

Mounting brackets for SL-VF/VH (All come 2 pcs. to 1 set)

Model	Product name
OP-83180	Standard mounting bracket J
OP-42347	Standard mounting bracket A
OP-42348	Standard mounting bracket B
OP-42349	Standard mounting bracket C
OP-51698	Slim mounting bracket
OP-42371	L-shaped mounting bracket
OP-83181	Compact E-to-E bracket
OP-42370	E-to-E bracket

Mounting brackets for SL-VHM (All come 2 pcs. to 1 set)

Model	Product name
OP-84259	Standard mounting bracket
OP-84260	Space-saving mounting bracket

step 5 Select the cables

Select the cable appropriate for the connection method and necessary functions, and then use the cable specifications chart to select the cable with the correct output type (PNP/NPN) and length.

Basic connection

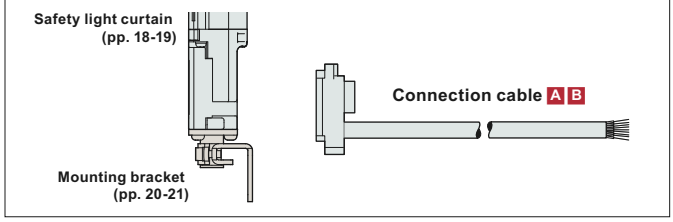

Note The connection cable is sold separately.

Note
- There are two types of cable: simple function type and multi-function type. The type of cable used determines the function that can be used (each type has a different number of conductors). Therefore, the two types of cables cannot be mixed. Make sure to use the appropriate type of cable for the application.
- Cables with different output types cannot be combined. Be sure to match the PNP or NPN output type especially when using the unit connection cable (for extension use).
- The minimum bending radius for the cable is 0.20" 5 mm.

When a large number of functions are not necessary

Simple function cable for basic connection

- 8-conductor shielded cable, brown/blue: AWG24 (cross-section area: 0.22 mm²)
- Other: AWG26 (cross-section area: 0.14 mm²)

A Unit connection cable Select the length and output type.

Shape	Output type	Length	Model
(Set for the transmitter and receiver) ø0.23" ø5.8; 1.42" 36.1; 0.56" 14.3	PNP	23.0' 7 m	SL-VP7P
		49.2' 15 m	SL-VP15P
	NPN	23.0' 7 m	SL-VP7N
		49.2' 15 m	SL-VP15N

◎The SL-V functions that can be used with the simple function type cable are limited. Check the functions in the "Available Functions" chart below.

When using all of the SL-V functions

Multi-function cable for basic connection

- 12-conductor shielded cable, brown/blue: AWG24 (cross-section area: 0.22 mm²)
- Other: AWG26 (cross-section area: 0.14 mm²)

B Unit connection cable Select the length and output type.

Shape	Output type	Length	Model
(Set for the transmitter and receiver) ø0.23" ø5.8; 1.42" 36.1; 0.56" 14.3	PNP	23.0' 7 m	SL-VP7PM
		49.2' 15 m	SL-VP15PM
	NPN	23.0' 7 m	SL-VP7NM
		49.2' 15 m	SL-VP15NM

Series connection

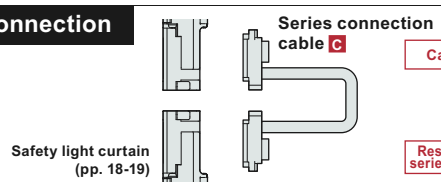

Cable rules

Since up to 3 of the SL-V units can be connected in series, up to 2 sets of series connection cables are required. Two sets of the SL-VS10 (cable length : 32.8' 10 m) cables can be used. In this case, the sum of the length of all types of cables, including the series connection cable, must be 164' 50 m or less. This limitation is applicable to each transmitter and receiver respectively.

Restrictions for series connection
- Up to 3 units
- Up to 240 total number of beam axes

Required for series connection

Series connection cable

C Series connection cable Select the length.

Shape	Length	Model
(Set for the transmitter and receiver) ø0.23" ø5.8	0.3' 0.08 m	SL-VS0
	0.5' 0.15 m	SL-VS01
	1.6' 0.5 m	SL-VS05
	3.3' 1 m	SL-VS1
	9.8' 3 m	SL-VS3
	32.8' 10 m	SL-VS10

When using the Safety Relay Terminal SL-T11R

Extension cable for SL-T11R

Shape	Length	Model
(Transmitter/receiver set) 1.42" 36.1; ø0.23" ø5.8; 0.56" 14.3; 1.77" 45; ø0.67" ø17; M14connector,male	9.6' 3 m	SL-VPT3PM
	16' 5 m	SL-VPT5PM
	32.8' 10 m	SL-VPT10PM

Shape	Length	Model
(Transmitter/receiver set) 1.73" 44; ø0.67" ø17; ø0.23" ø5.8; 1.77" 45; ø0.67" ø17; M14 connector, female; M14 connector, male	32.8' 10 m	SL-VCT10PM

Extension connection

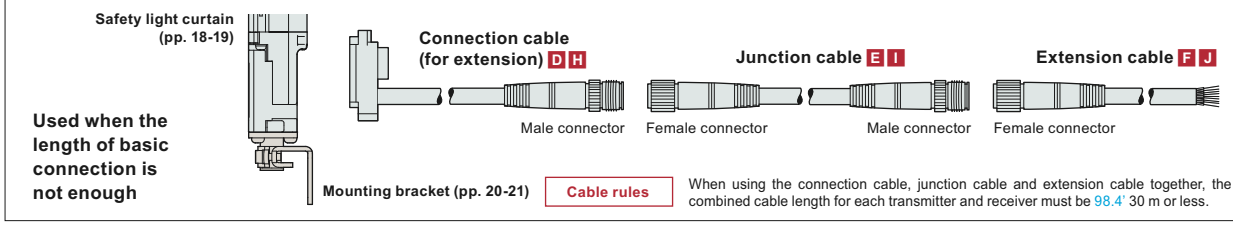

Cable rules When using the connection cable, junction cable and extension cable together, the combined cable length for each transmitter and receiver must be 98.4' 30 m or less.

When simple functions and a longer cable are necessary

Simple function cable for extension

- 8-conductor shielded cable, brown/blue: AWG24 (cross-section area: 0.22 mm²)
- Other: AWG26 (cross-section area: 0.14 mm²)

◎The SL-V functions that can be used with the simple function cable are limited.
See the "Available Functions" chart on page 16.

D Connection cable (for extension)

Use in combination with the junction cable and extension cable.

Select the length and output type.

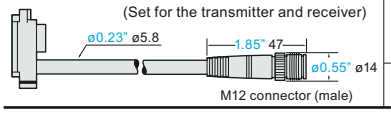

Output type	Length	Model
PNP	1.0' 0.3 m	SL-VPC03P
	16.4' 5 m	SL-VPC5P
	32.8' 10 m	SL-VPC10P
NPN	1.0' 0.3 m	SL-VPC03N
	16.4' 5 m	SL-VPC5N

E Junction cable

Select the length and output type.

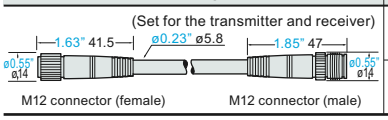

Output type	Length	Model
PNP	32.8' 10 m	SL-VCC10P
NPN	32.8' 10 m	SL-VCC10N

F Extension cable

Select the length and output type.

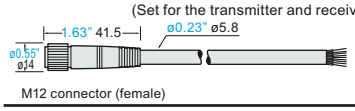

Output type	Length	Model
PNP	16.4' 5 m	SL-VC5P
	32.8' 10 m	SL-VC10P
NPN	16.4' 5 m	SL-VC5N
	32.8' 10 m	SL-VC10N

When more advanced functions and a long cable are necessary

Multi-function cable for extension

- 12-conductor shielded cable, brown/blue: AWG24 (cross-section area: 0.22 mm²)
- Other: AWG26 (cross-section area: 0.14 mm²)

H Connection cable (for extension)

Use in combination with the junction cable and extension cable.

Select the length and output type.

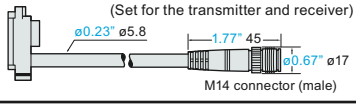

Output type	Length	Model
PNP	1.0' 0.3 m	SL-VPC03PM
	16.4' 5 m	SL-VPC5PM
	32.8' 10 m	SL-VPC10PM
NPN	1.0' 0.3 m	SL-VPC03NM
	16.4' 5 m	SL-VPC5NM

I Junction cable

Select the length and output type.

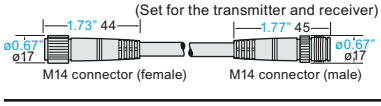

Output type	Length	Model
PNP	32.8' 10 m	SL-VCC10PM
NPN	32.8' 10 m	SL-VCC10NM

J Extension cable

Select the length and output type.

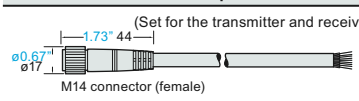

Output type	Length	Model
PNP	16.4' 5 m	SL-VC5PM
	32.8' 10 m	SL-VC10PM
NPN	16.4' 5 m	SL-VC5NM
	32.8' 10 m	SL-VC10NM

If optional protection is needed, go to step 6.

If optional protection is not needed, go to step 7.

step 6 Select the protection options as necessary

When necessary, add on the protection bar* to protect the safety light curtain from impact or the front protection cover to protect the detection surface. *This cannot be used with the Super Heavy Duty SL-VHM.

For SL-VF/VH **Protect the safety light curtain from being struck by the workpiece**

Protection Bar for Super Slim Models

This cannot be used on the heavy duty M-type curtains. Select the specific protection bar model from the specification chart below according to the SL-V model selected in step 3.

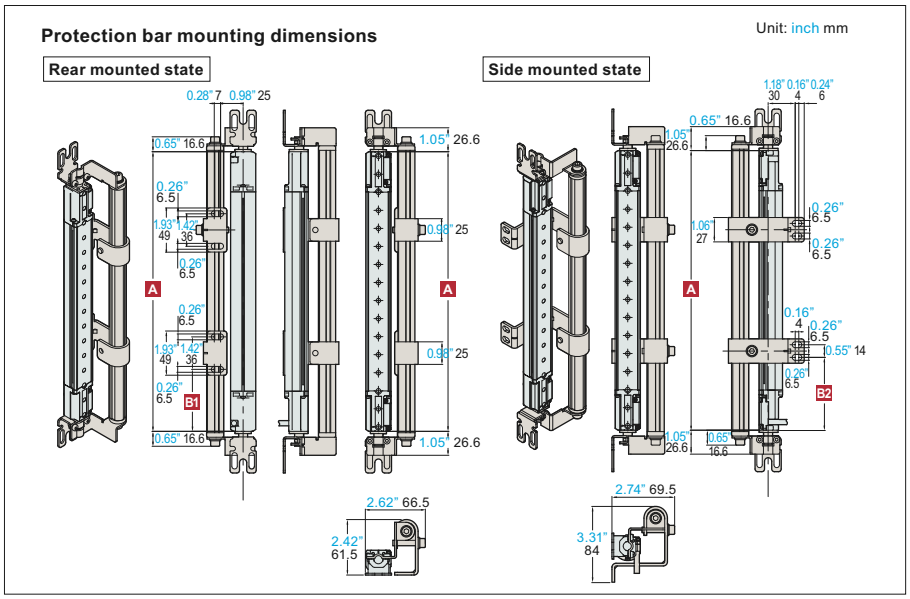

Select the model according to the SL-V model selected in step 3.

Unit: inch mm

Protection bar model	Corresponding SL-V model: Beam axis pitch: 0.39" 10 mm	Corresponding SL-V model: Beam axis pitch: 0.79" 20 mm	No. of required intermediate support brackets for the protection bar	A SL-V length	B1 Mounting position for intermediate support brackets for the protection bar in case of rear mounting: 1st	B1: 2nd	B1: 3rd	B2 Mounting position for intermediate support brackets for the protection bar in case of side mounting: 1st	B2: 2nd	B2: 3rd
SL-JB15	—	SL-V08H	0	5.91" 150	Not required	Not required	Not required	Not required	Not required	Not required
SL-JB23	SL-V23F	SL-V12H		9.06" 230						
SL-JB31	SL-V31F	SL-V16H		12.20" 310						
SL-JB39	SL-V39F	SL-V20H		15.35" 390						
SL-JB47	SL-V47F	SL-V24H		18.50" 470						
SL-JB55	SL-V55F	SL-V28H		21.65" 550						
SL-JB63	SL-V63F	SL-V32H		24.80" 630						
SL-JB71	SL-V71F	SL-V36H	1	27.95" 710	13.39"±0.79" 340±20			13.78"±0.79" 350±20		
SL-JB79	SL-V79F	SL-V40H		31.10" 790	14.96"±0.79" 380±20			15.35"±0.79" 390±20		
SL-JB87	SL-V87F	SL-V44H		34.25" 870	16.54"±0.79" 420±20			16.93"±0.79" 430±20		
SL-JB95	SL-V95F	SL-V48H		37.40" 950	18.11"±0.79" 460±20			18.50"±0.79" 470±20		
SL-JB103	SL-V103F	SL-V52H		40.55" 1030	19.69"±0.79" 500±20			20.08"±0.79" 510±20		
SL-JB111	SL-V111F	SL-V56H		43.70" 1110	21.26"±0.79" 540±20			21.65"±0.79" 550±20		
SL-JB119	SL-V119F	SL-V60H		46.85" 1190	22.83"±0.79" 580±20			23.23"±0.79" 590±20		
SL-JB127	SL-V127F	SL-V64H		50.00" 1270	24.41"±0.79" 620±20			24.80"±0.79" 630±20		
SL-JB143	—	SL-V72H	2	56.30" 1430	18.11"±0.79" 460±20	37.01"±0.79" 940±20		18.50"±0.79" 470±20	37.40"±0.79" 950±20	
SL-JB159		SL-V80H		62.60" 1590	20.08"±0.79" 510±20	40.94"±0.79" 1040±20		20.47"±0.79" 520±20	41.34"±0.79" 1050±20	
SL-JB175		SL-V88H		68.90" 1750	22.44"±0.79" 570±20	45.28"±0.79" 1150±20		22.83"±0.79" 580±20	45.67"±0.79" 1160±20	
SL-JB191		SL-V96H		75.20" 1910	24.41"±0.79" 620±20	49.61"±0.79" 1260±20		24.80"±0.79" 630±20	50.00"±0.79" 1270±20	
SL-JB207		SL-V104H	3	81.50" 2070	19.69"±0.79" 500±20	40.16"±0.79" 1020±20	60.24"±0.79" 1530±20	20.08"±0.79" 510±20	40.55"±0.79" 1030±20	61.02"±0.79" 1550±20
SL-JB223		SL-V112H		87.80" 2230	21.26"±0.79" 540±20	43.31"±0.79" 1100±20	64.96"±0.79" 1650±20	21.65"±0.79" 550±20	43.70"±0.79" 1110±20	65.75"±0.79" 1670±20
SL-JB239		SL-V120H		94.09" 2390	22.83"±0.79" 580±20	46.46"±0.79" 1180±20	69.69"±0.79" 1770±20	23.23"±0.79" 590±20	46.85"±0.79" 1190±20	70.47"±0.79" 1790±20

Note

● Two sets are required to install the protection bar on both the transmitter and receiver. ● When using the protection bar on the SL-V, either the standard bracket A (OP-42347), B (OP-42348), C (OP-42349) or J (OP-83180) is required. ● The protection bar and standard mounting brackets are secured with hexagonal-socket bolts, so the angle cannot be adjusted between the mounting brackets and protection bars. However, the angle between the SL-V and mounting brackets can be adjusted in order to adjust the beam axes. ● The protection bar can be mounted to the rear or side of the SL-V. Select the appropriate intermediate support bracket according to the type of mounting. ● Mount the SL-V within the angle shown to the right in order to prevent the SL-V beam axes from being cut off by the protection bar or intermediate support bracket.

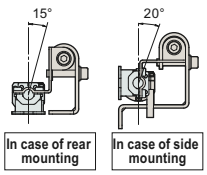

Note The optional protections are sold separately.

For SL-VF/VH **Protect the detection surface**

Protective Covers for Super Slim Models

Select the model from the chart to the right according to the SL-V model selected in step 3.

*Two sets are required to install protection on both the transmitter and receiver. The dimmer filter is used by attaching it to the front protection cover. Refer to the detection distances in the chart on the right when using the dimmer filter.

* The L-shaped mounting bracket (OP-42371) cannot be used when the front protection cover is attached.

Front protection cover mounting dimensions

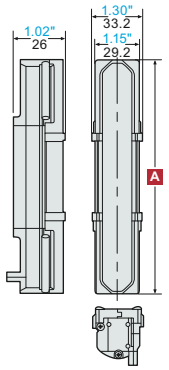

Unit: inch mm

Select the model according to the SL-V model selected in step 3.

Front protection cover model	Corresponding SL-V model: Beam axis pitch: 0.39" 10 mm	Corresponding SL-V model: Beam axis pitch: 0.79" 20 mm	Dimmer filter model	A Length (inch mm)
OP-51454	—	SL-V08H	OP-51469	5.92" 150.3
OP-51455	SL-V23F	SL-V12H	—	9.07" 230.3
OP-51456	SL-V31F	SL-V16H	OP-51470	12.22" 310.3
OP-51457	SL-V39F	SL-V20H	—	15.37" 390.3
OP-51458	SL-V47F	SL-V24H	OP-51471	18.52" 470.3
OP-51459	SL-V55F	SL-V28H	—	21.67" 550.3
OP-51460	SL-V63F	SL-V32H	OP-51472	24.81" 630.3
OP-51461	SL-V71F	SL-V36H	—	27.96" 710.3
OP-51462	SL-V79F	SL-V40H		31.11" 790.3
OP-51463	SL-V87F	SL-V44H		34.26" 870.3
OP-51464	SL-V95F	SL-V48H	OP-51473	37.41" 950.3
OP-51465	SL-V103F	SL-V52H	—	40.56" 1030.3
OP-51466	SL-V111F	SL-V56H		43.71" 1110.3
OP-51467	SL-V119F	SL-V60H		46.86" 1190.3
OP-51468	SL-V127F	SL-V64H	OP-51474	50.01" 1270.3
OP-83198	—	SL-V72H	—	56.31" 1430.2
OP-83200		SL-V80H		62.61" 1590.2
OP-83202		SL-V88H		68.91" 1750.2
OP-83204		SL-V96H		75.20" 1910.2
OP-83206		SL-V104H		81.50" 2070.2
OP-83208		SL-V112H		87.80" 2230.2
OP-83210		SL-V120H		94.10" 2390.2

For SL-VHM **Protect the detection surface for the Super Heavy Duty Models**

Protective Cover for Super Heavy Duty Models

*Two sets are required to install protection on both the transmitter and receiver. The dimmer filter is used by attaching it to the front protection cover. Refer to the detection distances in the chart to the lower right when using the dimmer filter. When using the dimmer filter, use the standard mounting brackets (OP-84259). If the standard mounting bracket is not used, the dimmer filter may slide off from the front protection cover.

Front protection cover mounting dimensions

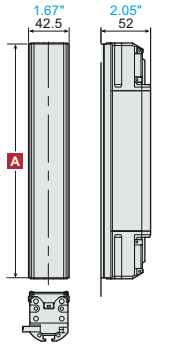

Unit: inch mm

Select the model according to the SL-V model selected in step 3.

Front protection cover model	Corresponding SL-V model	Dimmer filter model	A Length (inch mm)
OP-84238	SL-V12HM	—	9.65" 245
OP-84239	SL-V16HM		12.80" 325
OP-84240	SL-V20HM		15.94" 405
OP-84241	SL-V24HM	OP-84256	19.09" 485
OP-84242	SL-V28HM	—	22.24" 565
OP-84243	SL-V32HM		25.39" 645
OP-84244	SL-V36HM		28.54" 725
OP-84245	SL-V40HM		31.69" 805
OP-84246	SL-V44HM		34.84" 885
OP-84247	SL-V48HM	OP-84257	37.99" 965
OP-84248	SL-V52HM	—	41.14" 1045
OP-84249	SL-V56HM		44.29" 1125
OP-84250	SL-V60HM		47.44" 1205
OP-84251	SL-V64HM		50.59" 1285
OP-84252	SL-V72HM		56.85" 1444
OP-84253	SL-V80HM		63.15" 1604
OP-84254	SL-V88HM		69.45" 1764
OP-84255	SL-V96HM	OP-84258	75.75" 1924

Dimmer filter

When the dimmer filter is attached, the detection distance is decreased. See the chart to the right.

Detection distance when using the dimmer filter

No. of front protection covers used	No. of dimmer filters used	SL-V Series detection distance (foot m)*1	
0	0	0.3' to 29.5' 0.1 to 9	0.3' to 23.0' 0.1 to 7
1	0	0.3' to 27.9' 0.1 to 8.5	0.3' to 21.0' 0.1 to 6.4
	1	0.3' to 21.3' 0.1 to 6.5	0.3' to 15.4' 0.1 to 4.7
	2	0.3' to 16.4' 0.1 to 5	0.3' to 11.5' 0.1 to 3.5
2	0	0.3' to 26.3' 0.1 to 8	0.3' to 19.0' 0.1 to 5.8
	1	0.3' to 19.7' 0.1 to 6	0.3' to 14.1' 0.1 to 4.3
	2	0.3' to 14.8' 0.1 to 4.5	0.3' to 10.5' 0.1 to 3.2
	3	0.3' to 11.5' 0.1 to 3.5	0.3' to 7.9' 0.1 to 2.4
	4	0.3' to 8.2' 0.1 to 2.5	0.3' to 5.9' 0.1 to 1.8

*1. The detection distance varies according to the model.

step 7 Select the controllers and power sources as necessary

Select controllers and power sources for applications where relays and simplified wiring are needed or a controller to allow integration of other safety devices.

The following devices help the user to easily establish a Category 4 compatible safety circuit.

Type 4 Safety Relay Terminal dedicated for the SL-V Series [SL-T11R] Power source dedicated for a Type 4 light curtain (with class 2 output) [SL-U2]

Safety Relay Terminal dedicated for the SL-V Series

Model	Description	Safety input Safety light curtain	Safety output	Other I/O
SL-T11R	Safety Relay Terminal dedicated for SL-V	1 ch (dedicated for SL-V)	1 ch (2 terminals)	EDM input, muting input, AUX output, muting lamp output, etc.

Power Source dedicated for Safety Light Curtain

System	Model	Description	Input power supply voltage	Output voltage	Output capacity	Power consumption
Switching type	SL-U2	Power supply dedicated for safety light curtain	100 to 240 VAC ±10% (50/60 Hz)	24 VDC ±10%, Class 2	1.8 A	135 VA

Connect E-Stops or Interlock Devices to a safety circuit.

Safety Controller [SC Series]

Model	Description	Safety input	Safety output	Other I/O
SC-S11	E-Stop Safety Controller	1ch (2 terminals)	1 ch (2 terminals)	EDM input, reset input, external OFF input, AUX output, lockout output

step 8 Select the PC configuration software as necessary

The SL-VH1S Makes It Possible to Reduce On-Site Installation Time!

PC configuration software

Model	Name
SL-V1UB	SL-V Ver.3 Configuration Software Interface Unit (USB cable included with the SL-V1UB)
SL-VH1S	SL-V Ver.3 Configuration Software

Maximum safety standard

Type4 | **SIL3** | **Category4** | **PLe**

Specifications (common)

Model			SL-VF/SL-VFM	SL-VH/SL-VHM
Beam axis spacing/Lens diameter			0.39" 10 mm/φ0.16" φ4 mm	0.79" 20 mm/φ0.20" φ5 mm
Detection capability			φ0.55" φ14 mm	φ0.98" φ25 mm
Operating distance			0.30' 0.1 m to 22.97' 7.0 m	0.30' 0.1 m to 29.53' 9.0 m (detection height of 49.61" 1,260 mm or less) 0.30' 0.1 m to 22.97' 7.0 m (detection height of 55.12" 1,400 mm or more)
Effective aperture angle			Max. ±2.5° (When operating distance is 98.23' 3 m or more)	
Response time			7 to 23.4 ms (See "Response Time" (p. 10) for details.)	
Light source			Infrared LED (850 nm)	
Operation form			Turns on when no interruptions are present in the detection zone (excluding when the muting function is used)	
Rating	Power voltage		24 VDC +10%, –20% (Ripple P-P 10% or less)	
OSSD	Output		2 outputs each for PNP and NPN. Can be changed by using the connector cable.	
	Max. load current		500 mA*1	
	Residual voltage (during ON)		Max. 2.5 V (with a cable length of 22.97' 7 m)	
	Leakage current		Max. 100 μA*2	
	Max. capacitive load		2.2 μF (with a load resistance of 100Ω)	
	Load wiring resistance		Max. 2.5Ω*3	
Non safety-related output	AUX		Output with automatic PNP/NPN switching function, 50 mA max.	
	Interlock-reset-ready output			
	Alarm output			
	Clear/blocked output			
	State information output 1, 2			
	Muting lamp output		Incandescent lamp (24 VDC, 1 to 7 W) or LED lamp (load current: 10 to 300 mA)*4 can be connected	
Input	EDM input		Short-circuit current 10 mA	
	Wait input		Short-circuit current 2.5 mA	
	Reset input			
	Muting input 1, 2			
	Override input			
Protection circuit			Reverse current protection, short-circuit protection for each output, surge protection for each output	
Environmental condition	Enclosure rating		IP65 (IEC60529), IP65/67 (only SL-VFM/VHM)	
	Overvoltage category		II	
	Ambient temperature		–10 to +55°C (No freezing) 14 to 131°F	
	Storage ambient temperature		–25 to +60°C (No freezing) –13 to 140°F	
	Relative humidity		15 to 85% RH (No condensation)	
	Storage relative humidity		15 to 95% RH	
	Ambient light		White incandescent lamp: 5,000 lx or less. Sunlight: 20,000 lx or less.	
	Vibration		10 to 55 Hz, 0.7 mm compound amplitude, 20 sweeps each in the X, Y, and Z directions	
	Shock		100 m/s² (Approx. 10 G), 16 ms pulse in X, Y, Z directions, 1,000 times each axis	
Material	Main unit case		Aluminium	
	Upper case/lower case		Zinc die-cast	
	Front cover		Polycarbonate, SUS304	
Approved standards	EMC	EMS	IEC61496-1, EN61496-1, UL61496-1 , IEC62061	
		EMI	EN55011 Class A, FCC Part15B Class A, ICES-003 Class A	
	Safety		IEC61496-1, EN61496-1, UL61496-1 (Type 4 ESPE)	
			IEC61496-2, UL61496-2, EN61496-2 (Type 4 AOPD)	
			IEC61508 (SIL3), EN61508 (SIL3), IEC62061 (SIL3), EN ISO13849-1 (Category 4, PL e)	
			UL508	
			UL1998	

*1. When used in ambient temperatures between 45 to 55ºC, the maximum should not exceed 300 mA. *2. Applies to situations when power is either off or disconnected. *3. The wiring resistance between the OSSD output and the connected equipment (excluding the resistance of the cable) must be 2.5Ω or less to ensure operations. If using the NPN output with a cable length of 15 m or longer, and the load current consumption is 200 mA or more, the wire resistance must be 1.0Ω or less. *4. When used in ambient temperature between 45 to 55ºC, use incandescent lamps (24 VDC, 1 to 3 W) or LED lamps (load current: 10 to 100 mA).*5. This function cannot be used in the SL-VHS series.

Meaning of Indicators

Transmitter

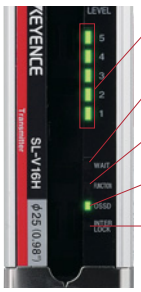

LED bar indicator

Wait input indicator
When OFF: Unlit
When ON: Flashes orange

Always unlit

OSSD output indicator
When OFF: Red
When ON: Green

Interlock indicator
During interlock: Lights yellow
During lockout: Flashes yellow
When neither of the above: Unlit

Receiver

LED bar indicator

Muting indicator
When input is OFF: Unlit
When input is ON: Flashes orange
Muting state: Lights orange
Override state: Flashes orange

Highly-Visible Indicators (During normal state)

Blocked → Unblocked

	Completely blocked	Bottom receives light	Top receives light	Slightly blocked	Slightly receiving light				Stable reception
5	OFF	OFF	RED	RED	OFF	OFF	OFF	OFF	GREEN
4	OFF	OFF	OFF	RED	OFF	OFF	OFF	GREEN	GREEN
3	OFF	OFF	OFF	RED	OFF ↔	OFF	GREEN	GREEN	GREEN
2	OFF	OFF	OFF	RED	GREEN	OFF	GREEN	GREEN	GREEN
1	OFF	RED	OFF	RED	GREEN	OFF	GREEN	GREEN	GREEN

During an error

Lit No. (Either transmitter or receiver) and the error	
2	OSSD error
1 and 2	EDM error
3	Communication error
1 and 3	Receiver error
2 and 3	Transmitter error
4	Interlock error
1 and 4	System error

*For details, see the SL-V Operation Manual.

Response time (OSSD output)

Unit: ms

Model	Response time (OSSD)	
	ON→OFF	OFF→ON*
SL-V23F/FM	9.1	49.1
SL-V31F/FM	10.2	50.2
SL-V39F/FM	11.3	51.3
SL-V47F/FM	12.4	52.4
SL-V55F/FM	13.5	53.5
SL-V63F/FM	14.6	54.6
SL-V71F/FM	15.7	55.7
SL-V79F/FM	16.8	56.8
SL-V87F/FM	17.9	57.9
SL-V95F/FM	19	59
SL-V103F/FM	20.1	60.1
SL-V111F/FM	21.2	61.2
SL-V119F/FM	22.3	62.3
SL-V127F/FM	23.4	63.4

If the detection zone is blocked for less than 80 ms, the response time (OFF to ON) will be 80 ms or more to ensure that the OSSD remains OFF for more than 80 ms.

Note

When connecting SL-V units in series, the response time (ON to OFF) is the sum of the response times of all the individual SL-V units, but the response time (OFF to ON) is the same as that of a single SL-V unit.
e.g. When connecting the SL-V32H (32 beam axes), SL-V24H (24 beam axes), and SL-V12L (12 beam axes) in series, the response time of each unit is 10.3 ms, 9.2 ms, and 7.6 ms respectively, and the response time (ON to OFF) is 10.3 ms + 9.2 ms + 7.6 ms = 27.1 ms.
Response time (OFF to ON) is 27.1 ms + 40 ms = 67.1 ms.

Unit: ms

Model	Response time (OSSD)	
	ON→OFF	OFF→ON*
SL-V08H	7	47
SL-V12H/HM	7.6	47.6
SL-V16H/HM	8.1	48.1
SL-V20H/HM	8.7	48.7
SL-V24H/HM	9.2	49.2
SL-V28H/HM	9.8	49.8
SL-V32H/HM	10.3	50.3
SL-V36H/HM	10.9	50.9
SL-V40H/HM	11.4	51.4
SL-V44H/HM	12	52
SL-V48H/HM	12.5	52.5
SL-V52H/HM	13.1	53.1
SL-V56H/HM	13.6	53.6
SL-V60H/HM	14.2	54.2
SL-V64H/HM	14.7	54.7
SL-V72H/HM	15.8	55.8
SL-V80H/HM	16.9	56.9
SL-V88H/HM	18	58
SL-V96H/HM	19.1	59.1
SL-V104H	20.2	60.2
SL-V112H	21.3	61.3
SL-V120H	22.4	62.4

Current consumption

Unit: mA

Model	When the center indicator is ON		When the center indicator is OFF	
	Transmitter	Receiver	Transmitter	Receiver
SL-V23F/FM	83	78	80	74
SL-V31F/FM	93	80	90	75
SL-V39F/FM	103	82	99	77
SL-V47F/FM	112	85	107	78
SL-V55F/FM	121	87	115	80
SL-V63F/FM	129	89	122	82
SL-V71F/FM	136	92	129	83
SL-V79F/FM	142	94	135	85
SL-V87F/FM	148	97	140	87
SL-V95F/FM	154	99	145	88
SL-V103F/FM	159	101	149	90
SL-V111F/FM	163	104	152	92
SL-V119F/FM	166	106	156	93
SL-V127F/FM	169	109	158	95

Note

The current consumption of the transmitter increases by 10 mA and decreases on the receiver by 10 mA when the AUX output (red wire of the transmitter) and the EDM input (red wire of the receiver) are short circuited if the following additional condition is met. (The total consumption of both the transmitter and receiver is fixed.)

- In case where PNP output type cable is used, the condition is that OSSD keeps OFF state.
- In case where NPN output type cable is used, the condition is that OSSD keeps ON state.

Unit: mA

Model	When the center indicator is ON		When the center indicator is OFF	
	Transmitter	Receiver	Transmitter	Receiver
SL-V08H	56	70	52	65
SL-V12H/HM	63	72	58	66
SL-V16H/HM	69	74	64	67
SL-V20H/HM	75	75	70	68
SL-V24H/HM	81	77	76	69
SL-V28H/HM	87	79	81	69
SL-V32H/HM	93	80	86	70
SL-V36H/HM	98	82	91	71
SL-V40H/HM	103	84	96	72
SL-V44H/HM	108	85	100	73
SL-V48H/HM	113	87	104	74
SL-V52H/HM	117	88	109	74
SL-V56H/HM	122	90	112	75
SL-V60H/HM	126	91	116	76
SL-V64H/HM	130	93	120	77
SL-V72H/HM	137	96	126	78
SL-V80H/HM	144	98	132	80
SL-V88H/HM	149	101	136	81
SL-V96H/HM	154	104	140	83
SL-V104H	159	107	143	84
SL-V112H	162	109	146	86
SL-V120H	165	112	147	87

Weight

Unit: g

Model	Weight	
	Transmitter	Receiver
SL-V23F	200	205
SL-V31F	270	275
SL-V39F	330	345
SL-V47F	390	405
SL-V55F	450	465
SL-V63F	510	525
SL-V71F	570	585
SL-V79F	620	635
SL-V87F	670	685
SL-V95F	720	735
SL-V103F	760	775
SL-V111F	810	815
SL-V119F	850	855
SL-V127F	890	895

Unit: g

Model	Weight	
	Transmitter	Receiver
SL-V23FM	670	680
SL-V31FM	830	840
SL-V39FM	990	1000
SL-V47FM	1150	1160
SL-V55FM	1300	1320
SL-V63FM	1460	1470
SL-V71FM	1610	1630
SL-V79FM	1760	1770
SL-V87FM	1900	1910
SL-V95FM	2050	2060
SL-V103FM	2190	2200
SL-V111FM	2330	2330
SL-V119FM	2470	2460
SL-V127FM	2590	2600

Unit: g

Model	Weight	
	Transmitter	Receiver
SL-V08H	150	155
SL-V12H	200	205
SL-V16H	250	265
SL-V20H	300	315
SL-V24H	350	365
SL-V28H	400	415
SL-V32H	450	465
SL-V36H	500	515
SL-V40H	550	575
SL-V44H	600	625
SL-V48H	650	675
SL-V52H	700	725
SL-V56H	750	775
SL-V60H	800	835
SL-V64H	860	885
SL-V72H	960	985
SL-V80H	1060	1095
SL-V88H	1160	1195
SL-V96H	1260	1295
SL-V104H	1360	1405
SL-V112H	1460	1505
SL-V120H	1570	1615

Unit: g

Model	Weight	
	Transmitter	Receiver
SL-V12HM	670	680
SL-V16HM	810	830
SL-V20HM	960	970
SL-V24HM	1110	1120
SL-V28HM	1250	1270
SL-V32HM	1400	1410
SL-V36HM	1540	1560
SL-V40HM	1690	1710
SL-V44HM	1830	1850
SL-V48HM	1980	2000
SL-V52HM	2130	2150
SL-V56HM	2270	2290
SL-V60HM	2420	2440
SL-V64HM	2560	2590
SL-V72HM	2850	2880
SL-V80HM	3140	3170
SL-V88HM	3440	3470
SL-V96HM	3730	3760

Specifications [For SC-S11/SL-T11/SL-U2]

Model			SC-S11
Rating	Power voltage		24 VDC ±10% (Ripple P-P 10% or less), class 2
	Current consumption		1.3 A (with maximum load)
Response time			25 ms (Safety output ON → OFF, IEC/EN 60204-1 stop category 0), 70 ms (Safety output OFF → ON)
Safety output (S-OUTPUT)	Output type		PNP , 2outputs
	Maximum load current		500 mA
	Residual voltage (when ON)		max. 2.5 V (with 500 mA load current)
	Leakage current		max. 1.2 mA
	Maximum load capacity		2.2 μF (wiith 100 Ω load resistance)
	Load wiring length		max. 30 m 98.4'
Safety input (S-INPUT)	Input type		No-voltage contactor or PNP output device
	Short-circuit current		Approx. 5 mA
	ON/OFF voltage		ON voltage: 19 V or more., OFF voltage: 5 V or less.
	Wiring length		max. 30 m 98.4'
Safety-related input (EDM input, reset input)	Input type		Non-voltage contact input
	Short-circuit current		EDM input: approx. 10 mA, reset input: approx. 5 mA
	Wiring length		max. 30 m 98.4'
Non-safety output (Aux output, lockout output)	Output type		PNP/NPN totem-pole output
	Maximum load current		50 mA
	Rosidual voltage		max. 2.5V (with 50 mA load current)
	Leakage current		max. 1 mA
	Load wiring length		max. 10 m 32.8'
Non-safety input (External OFF input)	Input type		Non-voltage contact input or PNP/NPN open collector input
	Short-circuit current		Approx. 5 mA
	ON/OFF voltage		ON voltage: 5 V or less or 19 V or more, OFF voltage: open or 9 to 15 V
	Wiring length		max. 10 m 32.8'
Protection circuit			Reverse connection protection for the power,overcurrent protection/short-circuit protection/surge protection for each circuit
Environmental condition	Enclosure rating		IP20 (IEC60529) : Must be installed in the control panel of IP54 or higher
	Pollution degree		2 (IEC60664/EN50178)
	Overvoltage category		II (IEC60664/EN50178)
	Withstand voltage		Internal circuit-external case 1,500 V AC, 50/60 Hz, for one minute
	Insulating resistance		Internal circuit-external case 100 MΩ or more (500 V DC M)
	Surrounding air temperature		–10 to +55°C (No freezing) 14 to 131°F
	Storage ambient temperature		–20 to +65°C (No freezing) –13 to 140°F
	Ambient humidity		35 to 85% RH (No condensation)
	Storage ambient humidity		35 to 85% RH
	Vibration		10 to 55 Hz, 0.7 mm 0.03" compound amplitude, 20 sweeps each in X, Y, and Z directions
	Shock		100 m/s² (Approx. 10 G), 16 ms pulse, in X, Y, and Z directions, for 1,000 times each
Material	Main unit case		Polycarbonate (UL94-V2)
Weight			160 g or less
Applicable standards	EMC	EMS	IEC61496-1, EN61496-1, UL61496-1
		EMI	EN55011 Class A, FCC Part 15 Class A, ICES-003 Issue 4 Class A
	Safety		EN ISO13849-1:2008 (Cat. 4, PL e), UL1998, IEC/EN/UL61496-1, UL508, EN50178

Model			SL-T11R
Combined light curtain			SL-V Series
Response time FSD1, 2			ON to OFF: 6 ms OFF to ON: 15 ms
Rating	Power voltage		24 V DC ±10% (Ripple P-P 10% or less)
	Current consumption		100 mA or less (at 24V DC, SL-T11R alone)
Output *	FSD1, 2		230 V AC, 4 A 30 V DC, 2 A (Resistance load)
			230 V AC, 2 A (COSφ=0.3) (Inductive load)
			30 V DC, 1 A (COSφ=0.3) (Inductive load)
	Lifespan		Mechanical life: 10 million cycles or more
			Electrical life: 0.1 million cycles or more
Environmental resistance	Enclosure rating		IP20 (IEC60529) Set inside the control panel with IP54 or more
	Pollution degree		2
	Overvoltage category		III (Relay load)
	Ambient temperature		–10 to +55°C (No freezing) 14 to 131°F
	Storage ambient temperature		–25 to +65°C (No freezing) –13 to 140°F
	Relative humidity		15 to 85% RH (No condensation)
	Storage relative humidity		15 to 95% RH (No condensation)
	Vibration		10 to 55 Hz, 0.7 mm 0.03" compound amplitude, 20 sweeps each in X, Y, and Z directions
	Shock		100 m/s² (Approx. 10 G) 16 ms pulse, in X, Y, and Z directions 1,000 times each axis
Material			Polycarbonate
Weight			Approx. 330g
Approved standards	EMC	EMS	UL61496-1, IEC61496-1, EN61496-1
		EMI	FCC Part15B Class A, ICES-003 Class A, EN55011 Class A
	Safety		UL61496-1, IEC61496-1, EN61496-1 (Type 4 ESPE), EN ISO13849-1:2008 (Category 4, PLe), UL508

* For the specifications for the outputs other than FSD and for each input, refer to the SL-V Instruction Manual.

Model		SL-U2
System		Switching type
Input power supply voltage		100 to 240 VAC ±10% (50/60 Hz)
Overvoltage category		II
Output voltage		24 V DC ±10%, Class 2
Ripple/noise		240 mVp-p or less
Output capacity		1.8 A
Ambient temperature		–10 to +55°C (No freezing) 14 to 131°F
Relative humidity		35 to 85% RH (No condensation)
Pollution degree		2
Withstand voltage		1,500 VAC, 1 min. (between all external terminals and case)
Vibration resistance		10 to 55 Hz, double amplitude 0.7 mm 0.03", 20 sweeps each in X, Y, and Z directions
Shock resistance		100 m/s² (Approx. 10 G), 1,000 iterations 16 ms pulse each in X, Y, and Z directions
Insulation resistance		At least 50 MΩ (500 VDC mega, between all external terminals and case)
Power consumption		135 VA
Supply voltage interruption		10 ms or less
Weight (excluding dedicated brackets)		Approx. 240 g
Approved standards	EMC	EN61000-6-2, EN55011 Class A, FCC Part15 Class A, ICES-003 Class A
	Safety	EN60950, EN50178, UL60950-1, UL508

Examples of wiring

Wiring example with the simple function cable to use only OSSD output [Auto-reset mode]

PNP output

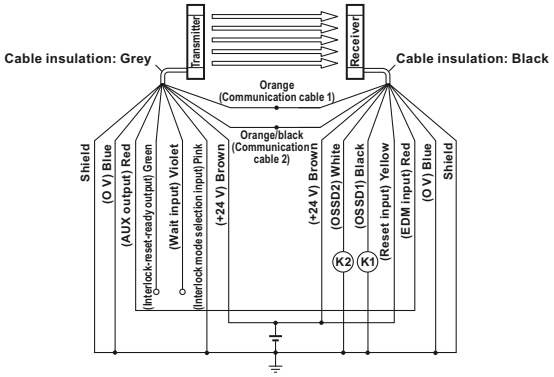

K1, K2: External device (Safety relay unit, etc.)

Note
- The shielding wire of the PNP output cable is connected to 0 V line in the SL-V. Do not connect the shielding wire to +24 V line.
- Unused wires should be individually isolated and terminated to avoid shorts.

NPN output

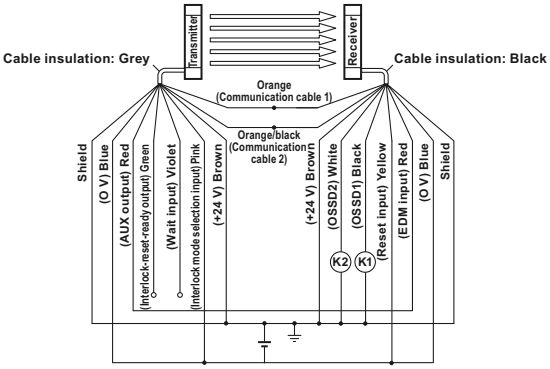

K1, K2: External device (Safety relay unit, etc.)

Note
- The shielding wire of the NPN output cable is connected to +24 V line in the SL-V. Do not connect the shielding wire to 0 V line.
- Unused wires should be individually isolated and terminated to avoid shorts.

During auto-reset mode, use the N.C. switch to use the reset input (yellow) to clear the lockout state.
Note that the N.O. switch is used during manual reset mode.

Wiring example when using all of the functions that can be performed with the Simple function cable [Manual reset mode]

PNP output

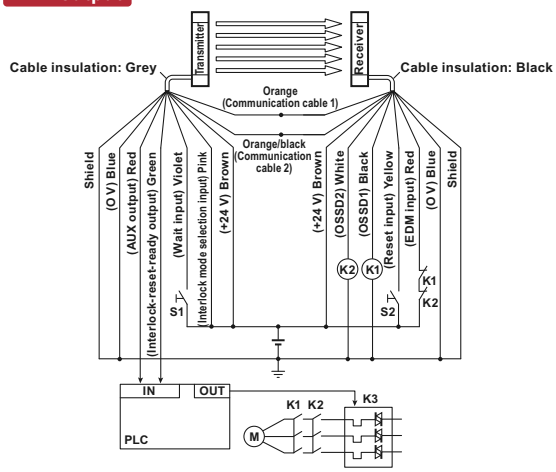

K1, K2 : External device (Safety relay, magnet contactor, etc.)
K3 : Solid state contactor*1
S1 : The switch for wait input (N.O.)*1 Insulation on the violet wire is needed if this function is not used. (Open circuit : completely disconnected)
S2 : The switch for reset input (N.O.)
M : 3-phase motor
PLC : For the monitoring use*1
*1. These are NON SAFETY-RELATED system.

Note
- The shielding wire of the PNP output cable is connected to 0 V line in the SL-V. Do not connect the shielding wire to +24 V line.
- Unused wires should be individually isolated and terminated to avoid shorts.

NPN output

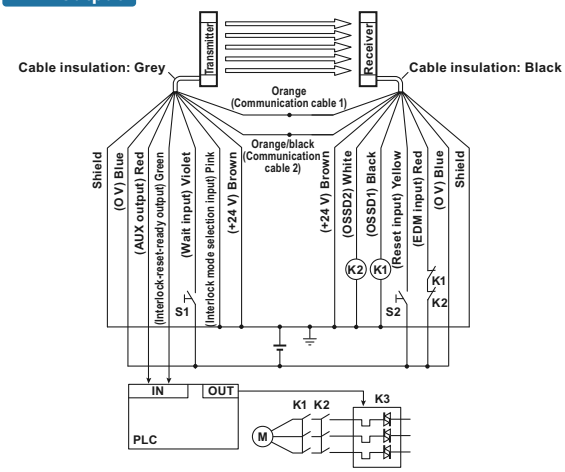

K1, K2 : External device (Safety relay, magnet contactor, etc.)
K3 : Solid state contactor*1
S1 : The switch for wait input (N.O.)*1 Insulation on the violet wire is needed if this function is not used. (Open circuit : completely disconnected)
S2 : The switch for reset input (N.O.)
M : 3-phase motor
PLC : For the monitoring use*1
*1. These are NON SAFETY-RELATED system.

Note
- The shielding wire of the NPN output cable is connected to +24 V line in the SL-V. Do not connect the shielding wire to 0 V line.
- Unused wires should be individually isolated and terminated to avoid shorts

The wiring for the pink wire selects auto or manual reset mode.

- Auto-reset mode: When the blocked state switches to the clear state, the OSSD output automatically restarts.
- Manual reset mode: When the blocked state switches to the clear state, the OSSD output does not restart until the reset input is entered.

Example of wiring for the multi-function cable

PNP output

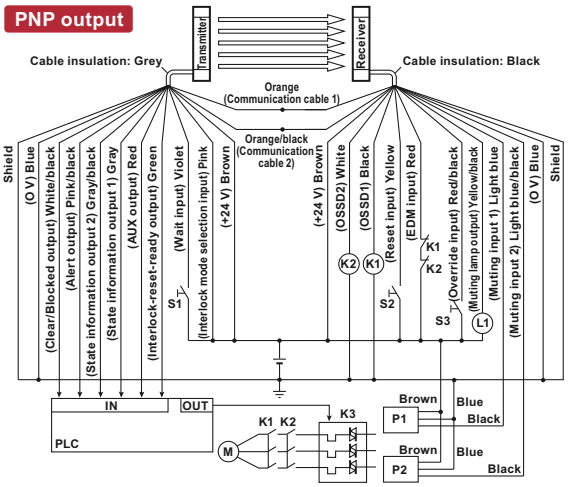

K1, K2: External device (Safety relay unit, magnet contactor, etc.)
K3: Solid state contactor*1
S1: The switch for wait input (N.O.)*1 Insulation on the violet wire is needed if this function is not used. (Open circuit : completely disconnected)
S2: The switch for reset input (N.O.)
S3: The switch for override input (N.O.)
L1: Muting lamp (Incandescent lamp or LED lamp)
P1, P2: Muting device (PZ self-contained photoelectric sensors <PNP output>, etc.)
M: 3-phase motor
PLC: For the monitoring use*1
*1. These are NON SAFETY-RELATED system.

Note ● The shielding wire of the PNP output cable is connected to 0 V line in the SL-V. Do not connect the shielding wire to +24 V line.

NPN output

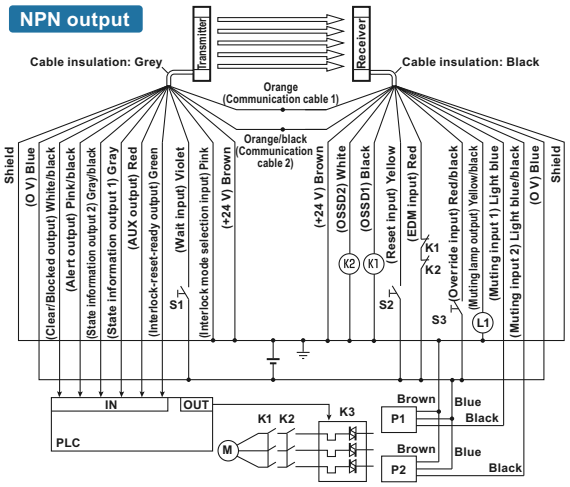

K1, K2 : External device (Safety relay unit, magnet contactor, etc.)
K3 : Solid state contactor*1
S1 : The switch for wait input (N.O.)*1 Insulation on the violet wire is needed if this function is not used. (Open circuit : completely disconnected)
S2 : The switch for reset input (N.O.)
S3 : The switch for override input (N.O.)
L1 : Muting lamp (Incandescent lamp or LED lamp)
P1, P2 : Muting device (PZ self-contained photoelectric sensors <NPN output>, etc.)
M : 3-phase motor
PLC : For the monitoring use*1
*1. These are NON SAFETY-RELATED system.

Note ● The shielding wire of the NPN output cable is connected to +24 V line in the SL-V. Do not connect the shielding wire to 0 V line.

I/O Circuit Diagram

Overall circuit diagram

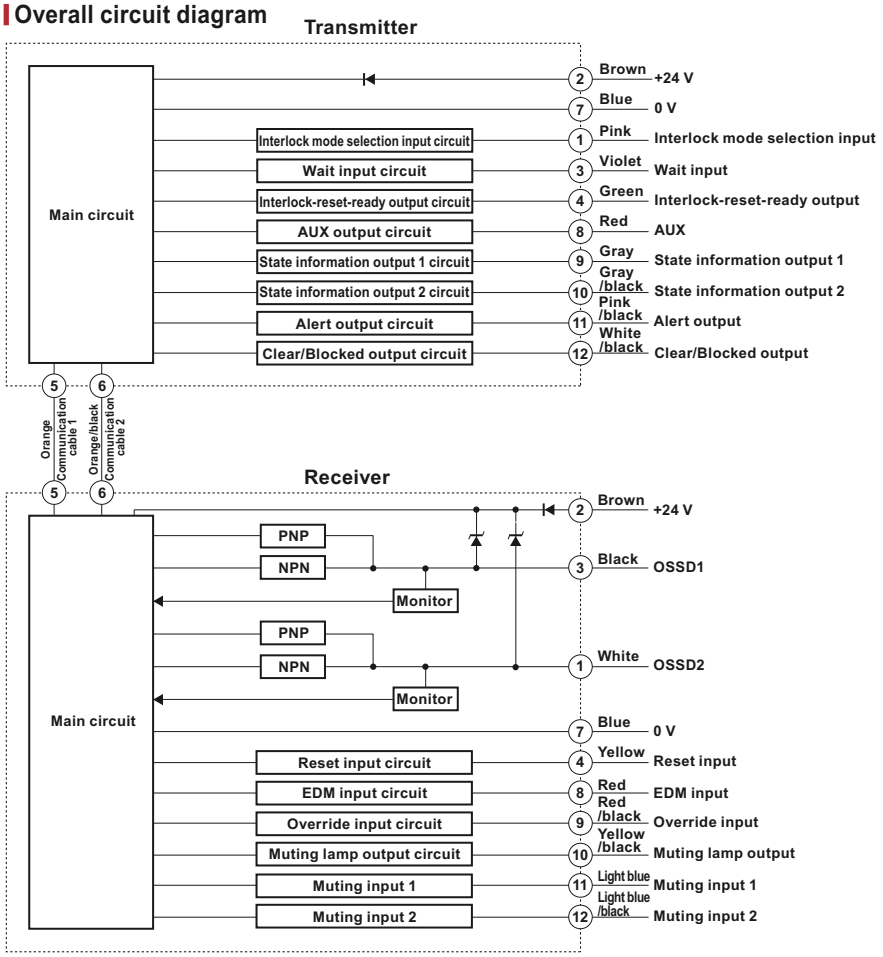

OSSD PNP output circuit

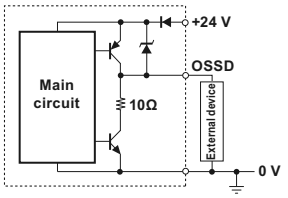

OSSD NPN output circuit

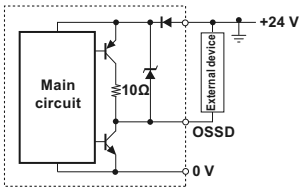

Input circuit

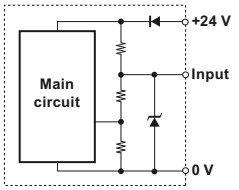

Output circuit

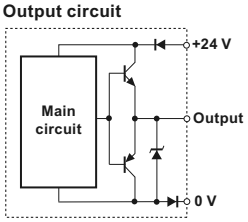

Internal Circuit Diagram [For SL-T11R]

Connector cable for the receiver

Pin No.	Name
1	OSSD2
2	0V
3	OSSD1
4	Reset input
5	Communication cable 1 (RS485+)
6	Communication cable 2 (RS485-)
7	+24V
8	EDM input
9	Override input
10	Muting lamp output
11	Muting input 1
12	Muting input 2

Connector cable for the transmitter

Pin No.	Name
1	Interlock mode selection input
2	0V
3	Wait input
4	Interlock-reset-ready output
5	Communication cable 1 (RS485+)
6	Communication cable 2 (RS485-)
7	+24V
8	AUX (auxiliary) output
9	State information output 1
10	State information output 2
11	Alert output
12	Clear/blocked output

*For the internal circuit of the SL-V, refer to the SL-V Instruction Manual.

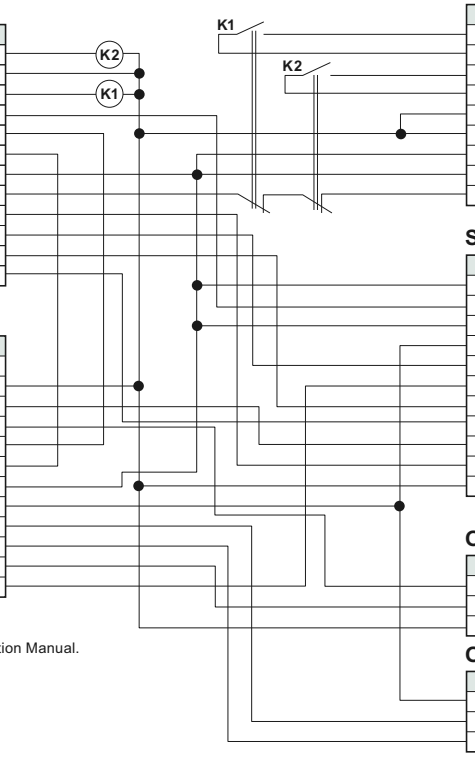

Relay output terminal

Terminal No.	Name
1	FSD1
2	
3	FSD2
4	
5	Function ground
6	0V
7	+24V
8	EDM input
9	

Signal input/output terminal

Terminal No.	Name
10	Reset input
11	
12	+24V
13	AUX (auxiliary) output
14	Muting lamp output
15	Clear/blocked output
16	Muting input 1
17	Muting input 2
18	Wait input
19	Override input
21	0V

Output connector A

Pin No.	Name
A-1	Interlock-reset-ready output
A-2	Alert output
A-3	0V

Output connector B

Pin No.	Name
B-1	AUX (auxiliary) output
B-2	State information output 1
B-3	State information output 2

Examples of wiring [For SL-T11R]

Relay output terminal

Name	Terminal No.
FSD1	1
	2
FSD2	3
	4
FG	5
0V*1	6
+24V*1	7
EDM input*2	8
	9

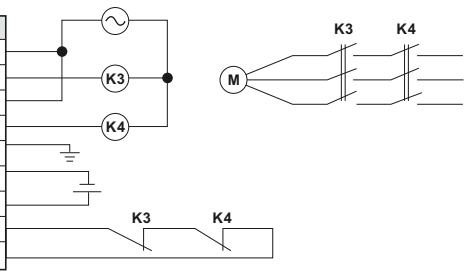

Signal input/output terminal (In manual reset mode)

Name	Terminal No.
Reset input*3	10
	11
+24V	12
AUX (auxiliary) output*4	13
Muting lamp output	14
Clear/blocked output	15
Muting input 1	16
Muting input 2	17
Wait input	18
Override input	19
0V	21

Output connector A

Name	Pin No.
Interlock-reset-ready output	A-1
Alert output	A-2
0V	A-3

Output connector B

Name	Pin No.
AUX (auxiliary) output*4	B-1
State information output 1	B-2
State information output 1	B-3

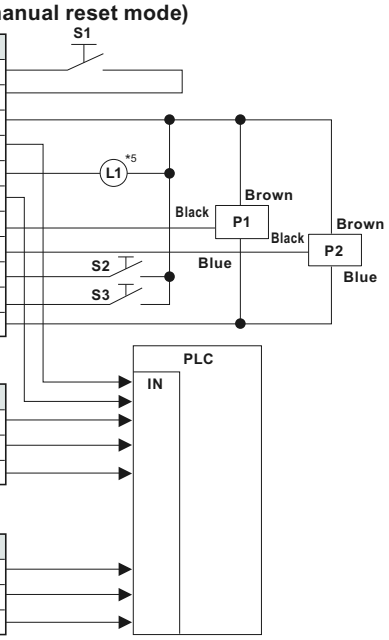

K3, K4 : External device (Magnet contactor, etc.)
S1 : The switch for reset input (N.O.)
S2 : The switch for wait input (N.C.)
S3 : The switch for override input (N.O.)
L1 : Muting lamp (Incandescent lamp or LED lamp)
P1, P2 : Muting device
(PZ self-contained photoelectric sensors <PNP output>, etc.)
M : 3-phase motor
PLC : For the monitoring use.
This is a NON SAFETY-RELATED system.

S2 and PLC are NON SAFETY-RELATED systems.

*1. No. 6 and No. 7 do not need to be wired when the SL-U2 is connected.
*2. If it is not necessary to perform error detection for K3 and K4 (when EDM input is not used), keep the short bar between No. 8 and No. 9 connected.
*3. In the auto reset mode, keep the short bar between No. 10 and No. 11 connected. To release the lockout condition of the SL-V through the reset input, connect the N.C. switch.
*4. The AUX output operates in the same way for both the signal input/output terminal and the output connector B.
*5. For screw terminal 14 on the signal input/output terminal, the max load is 80mA. Because of this, a muting lamp must be connected to another power source if the rated power consumption is greater than 2W.

Cable colors and pin positions

Simple type

For the transmitter		
Pin No.	**Wire color**	**Name**
1	Pink	Interlock selection input
2	Brown	+24 V
3	Purple	Wait input
4	Green	Interlock-reset-ready output
5	Orange	Communication wire 1 (RS485_+)
6	Orange/black	Communication wire 2 (RS485_-)
7	Blue	0 V
8	Red	AUX (auxiliary) output

For the receiver		
Pin No.	**Wire color**	**Name**
1	White	OSSD2
2	Brown	+24 V
3	Black	OSSD1
4	Yellow	Reset input
5	Orange	Communication wire 1 (RS485_+)
6	Orange/black	Communication wire 2 (RS485_-)
7	Blue	0 V
8	Red	EDM (external device monitor) input

Note **M12 connector male pin position** **M12 connector female pin position**

Multi-function cable

For the transmitter		
Pin No.	**Wire color**	**Name**
1	Pink	Interlock selection input
2	Brown	+24 V
3	Purple	Wait input
4	Green	Interlock-reset-ready output
5	Orange	Communication wire 1 (RS485_+)
6	Orange/black	Communication wire 2 (RS485_-)
7	Blue	0 V
8	Red	AUX (auxiliary) output*1
9	Gray	State information output 1*1
10	Gray/black	State information output 2*1
11	Pink/black	Cleaning (alert) output
12	Black/white	Clear/blocked output

For the receiver		
Pin No.	**Wire color**	**Name**
1	White	OSSD2
2	Brown	+24 V
3	Black	OSSD1
4	Yellow	Reset input
5	Orange	Communication wire 1 (RS485_+)
6	Orange/black	Communication wire 2 (RS485_-)
7	Blue	0 V
8	Red	EDM (external device monitor) input
9	Red/white	Override input
10	Yellow/black	Muting lamp output
11	Lt. blue	Muting input 1
12	Lt. blue/black	Muting input 2

*1. Various different states can be indicated by using combinations of AUX output and state information outputs 1 & 2.
For more information about simple mode, see the SL-V Operation Manual.

Note **M14 connector male pin position** **M14 connector female pin position**

Available Functions Chart

Function name	Simple function type cable	Multi-function type cable
Self-diagnostic function	○	○
Series connection function	○	○
Interlock function	○	○
EDM function	○	○
Wait input	○	○
AUX (auxiliary) output	○	○
State information output	Cannot be used.	○
Cleaning (alert) output		○
Clear/blocked output		○
Muting Function		○
Override function		○
I/O monitoring function	○	○

Precautions when selecting an input device (About OSSD output)

OSSD is a safety-related control output. It connects to an external device (load), such as an FSD or MPCE. The SL-V generates self-diagnostic signals on its internal control circuit to check the output circuit (OSSD). These signals cause the OSSD to be periodically forced OFF for a short time when no interruption exists in the detection zone.
If the internal control circuit receives the feed-back signal (OFF signal) based on the self-diagnosis, the SL-V determines that its output circuit is in the normal operation. If this OFF signal is not returned to the internal control circuit, the SL-V determines that there is a problem in its output circuit or wiring and goes to the lockout condition.

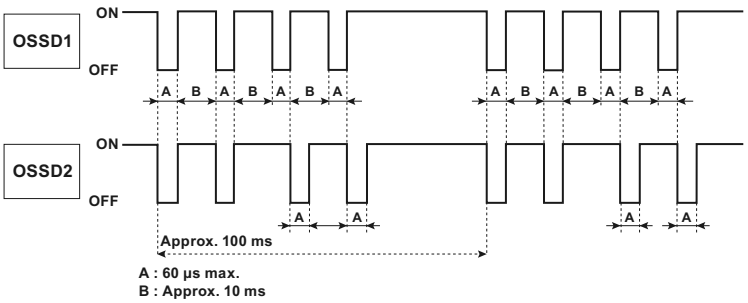

Note Equipment that does not respond to the temporary shutoff of the OSSD caused by the self-diagnostic signal must be used.

Dimensions [For SL-VF/VH]

SL-V (F/H)
Main unit

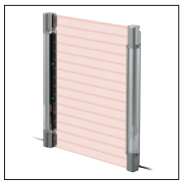

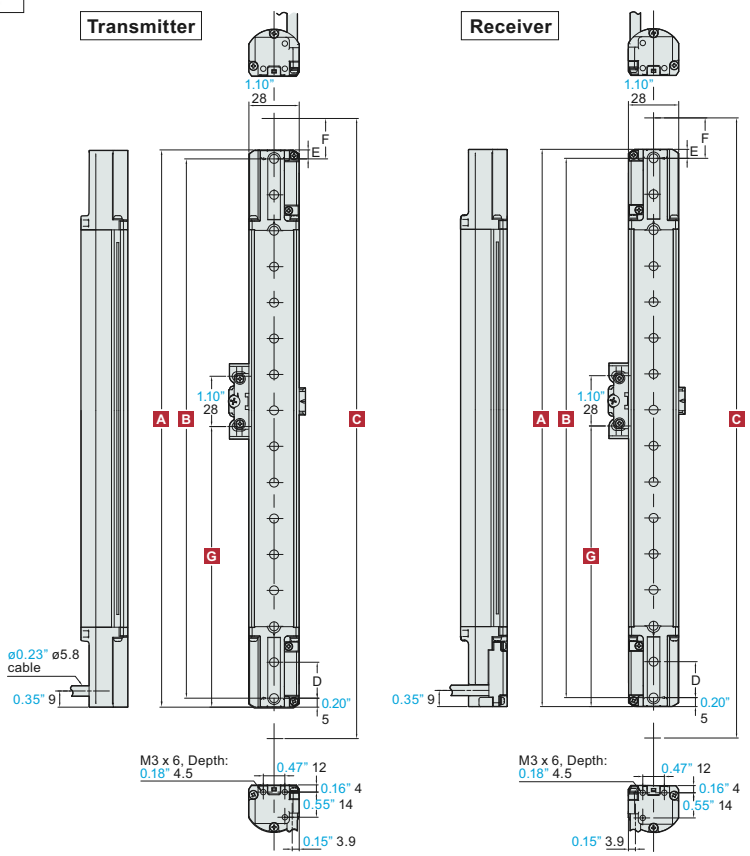

Note

If the length for a single SL-V unit is 710 mm 27.95" or greater, use a compact E-to-E mounting bracket or an E-to-E mounting bracket additionally as an intermediate support bracket. The figures show an example of the use of one compact E-to-E bracket.

Dimensions for units D – F

Series	D	E	F
SL-VF	0.39" 10	0.20" 5	0.47" 12
SL-VH	0.79" 20	0.20" 5	0.89" 22.5

SL-VF unit variation

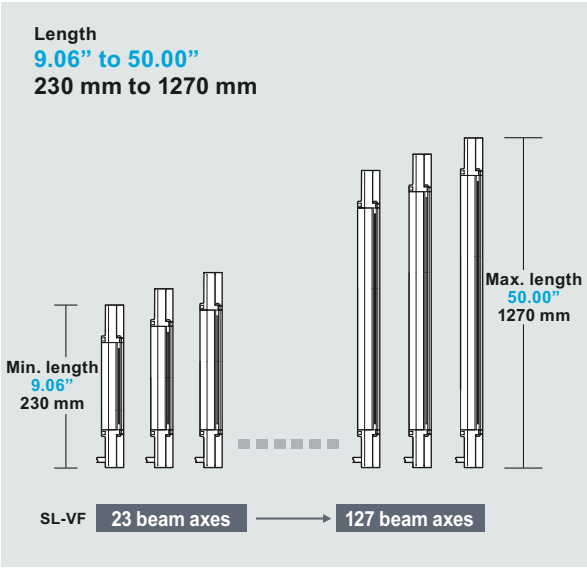

SL-VH unit variation

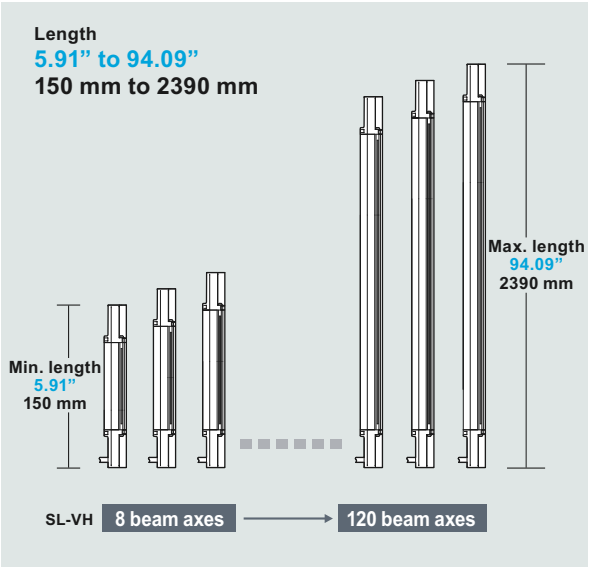

Dimensions for units A – C

SL-VF

Unit: inch mm

Model	A Length	No. of axes	B Detection height	C Protection height
SL-V23F	9.06" 230	23	8.66" 220	9.61" 244
SL-V31F	12.20" 310	31	11.81" 300	12.76" 324
SL-V39F	15.35" 390	39	14.96" 380	15.91" 404
SL-V47F	18.50" 470	47	18.11" 460	19.06" 484
SL-V55F	21.65" 550	55	21.26" 540	22.20" 564
SL-V63F	24.80" 630	63	24.41" 620	25.35" 644
SL-V71F	27.95" 710	71	27.56" 700	28.50" 724
SL-V79F	31.10" 790	79	30.71" 780	31.65" 804
SL-V87F	34.25" 870	87	33.86" 860	34.80" 884
SL-V95F	37.40" 950	95	37.01" 940	37.95" 964
SL-V103F	40.55" 1030	103	40.16" 1020	41.10" 1044
SL-V111F	43.70" 1110	111	43.31" 1100	44.25" 1124
SL-V119F	46.85" 1190	119	46.46" 1180	47.40" 1204
SL-V127F	50.00" 1270	127	49.61" 1260	50.55" 1284

SL-VH

Unit: inch mm

Model	A Length	No. of axes	B Detection height	C Protection height
SL-V08H	5.91" 150	8	5.51" 140	7.28" 185
SL-V12H	9.06" 230	12	8.66" 220	10.43" 265
SL-V16H	12.20" 310	16	11.81" 300	13.58" 345
SL-V20H	15.35" 390	20	14.96" 380	16.73" 425
SL-V24H	18.50" 470	24	18.11" 460	19.88" 505
SL-V28H	21.65" 550	28	21.26" 540	23.03" 585
SL-V32H	24.80" 630	32	24.41" 620	26.18" 665
SL-V36H	27.95" 710	36	27.56" 700	29.33" 745
SL-V40H	31.10" 790	40	30.71" 780	32.48" 825
SL-V44H	34.25" 870	44	33.86" 860	35.63" 905
SL-V48H	37.40" 950	48	37.01" 940	38.78" 985
SL-V52H	40.55" 1030	52	40.16" 1020	41.93" 1065
SL-V56H	43.70" 1110	56	43.31" 1100	45.08" 1145
SL-V60H	46.85" 1190	60	46.46" 1180	48.23" 1225
SL-V64H	50.00" 1270	64	49.61" 1260	51.38" 1305
SL-V72H	56.30" 1430	72	55.91" 1420	57.68" 1465
SL-V80H	62.60" 1590	80	62.20" 1580	63.98" 1625
SL-V88H	68.90" 1750	88	68.50" 1740	70.28" 1785
SL-V96H	75.20" 1910	96	74.80" 1900	76.57" 1945
SL-V104H	81.50" 2070	104	81.10" 2060	82.87" 2105
SL-V112H	87.80" 2230	112	87.40" 2220	89.17" 2265
SL-V120H	94.09" 2390	120	93.70" 2380	95.47" 2425

Mounting position G for the intermediate support bracket

When using a standard mounting bracket, slim bracket, or L-shaped bracket, if the total length is 710 mm 27.95" or longer, a compact E-to-E mounting bracket is required as an intermediate support bracket. For mounting position G of the compact E-to-E mounting bracket, see the lower chart below. When two or more intermediate support brackets are used, mount them so that the distance between the centers is within 600 mm 23.62" in order to fulfill vibration and shock specifications.

SL-VF/VH

Unit: inch mm

Model		G Intermediate support bracket mounting position			
F Series	H Series	1st	2nd	3rd	4th
———	SL-V08H	Not required	Not required	Not required	Not required
SL-V23F	SL-V12H				
SL-V31F	SL-V16H				
SL-V39F	SL-V20H				
SL-V47F	SL-V24H				
SL-V55F	SL-V28H				
SL-V63F	SL-V32H				
SL-V71F	SL-V36H	13.39±1.97 340±50			
SL-V79F	SL-V40H	14.96±1.97 380±50			
SL-V87F	SL-V44H	16.54±1.97 420±50			
SL-V95F	SL-V48H	18.11±1.97 460±50			
SL-V103F	SL-V52H	19.69±1.97 500±50			
SL-V111F	SL-V56H	21.26±1.97 540±50			
SL-V119F	SL-V60H	14.96±3.94 380±100	30.71±3.94 780±100		
SL-V127F	SL-V64H	16.14±3.94 410±100	32.68±3.94 830±100		
———	SL-V72H	18.11±3.94 460±100	37.01±3.94 940±100		
	SL-V80H	20.47±3.94 520±100	41.34±3.94 1050±100		
	SL-V88H	16.54±3.94 420±100	33.86±3.94 860±100	51.18±3.94 1300±100	
	SL-V96H	18.11±3.94 460±100	37.01±3.94 940±100	55.91±3.94 1420±100	
	SL-V104H	19.69±3.94 500±100	40.16±3.94 1020±100	60.63±3.94 1540±100	
	SL-V112H	16.93±3.94 430±100	34.65±3.94 880±100	51.97±3.94 1320±100	69.69±3.94 1770±100
	SL-V120H	18.11±3.94 460±100	37.01±3.94 940±100	55.91±3.94 1420±100	74.80±3.94 1900±100

Mounting position G for the compact E-to-E mounting bracket

The following chart shows the bracket mounting position G and the number of brackets required. More intermediate support brackets are required as the unit becomes longer.

*The compact E-to-E mounting brackets [OP-83181 or OP-42370] are sold separately and do not come with the safety light curtain. When three or more mounting brackets are used, mount them so that the distance between the centers is within 600 mm in order to fulfill vibration and shock specifications.

SL-VF/VH

Unit: inch mm

Model		G Bracket mounting position					
F Series	H Series	1st	2nd	3rd	4th	5th	6th
———	SL-V08H*1	2.36±0.39 60±10	Not required	Not required	Not required	Not required	Not required
SL-V23F	SL-V12H	2.76±0.39 70±10	5.51±0.39 140±10				
SL-V31F	SL-V16H	2.76±0.39 70±10	8.66±0.39 220±10				
SL-V39F	SL-V20H	2.76±0.39 70±10	11.81±0.39 300±10				
SL-V47F	SL-V24H	2.76±0.39 70±10	14.96±0.39 380±10				
SL-V55F	SL-V28H	2.76±0.39 70±10	18.11±0.39 460±10				
SL-V63F	SL-V32H	2.76±0.39 70±10	21.26±0.39 540±10				
SL-V71F	SL-V36H	2.76±0.79 70±20	13.39±3.94 340±100	24.41±0.79 620±20			
SL-V79F	SL-V40H	2.76±0.79 70±20	14.96±3.94 380±100	27.56±0.79 700±20			
SL-V87F	SL-V44H	2.76±0.79 70±20	16.54±3.94 420±100	30.71±0.79 780±20			
SL-V95F	SL-V48H	2.76±0.79 70±20	18.11±3.94 460±100	33.86±0.79 860±20			
SL-V103F	SL-V52H	2.76±0.79 70±20	19.69±3.94 500±100	37.01±0.79 940±20			
SL-V111F	SL-V56H	2.76±0.79 70±20	21.26±3.94 540±100	40.16±0.79 1020±20			
SL-V119F	SL-V60H	2.76±0.79 70±20	16.14±3.94 410±100	29.53±3.94 750±100	43.31±0.79 1100±20		
SL-V127F	SL-V64H	2.76±0.79 70±20	17.32±3.94 440±100	31.89±3.94 810±100	46.46±0.79 1180±20		
———	SL-V72H	2.76±0.79 70±20	19.29±3.94 490±100	35.83±3.94 910±100	52.76±0.79 1340±20		
	SL-V80H	2.76±0.79 70±20	21.26±3.94 540±100	40.16±3.94 1020±100	59.06±0.79 1500±20		
	SL-V88H	2.76±0.79 70±20	18.11±3.94 460±100	33.86±3.94 860±100	49.61±3.94 1260±100	65.35±0.79 1660±20	
	SL-V96H	2.76±0.79 70±20	19.69±3.94 500±100	37.01±3.94 940±100	54.33±3.94 1380±100	71.65±0.79 1820±20	
	SL-V104H	2.76±0.79 70±20	21.26±3.94 540±100	40.16±3.94 1020±100	59.06±3.94 1500±100	77.95±0.79 1980±20	
	SL-V112H	2.76±0.79 70±20	18.90±3.94 480±100	35.04±3.94 890±100	51.57±3.94 1310±100	67.72±3.94 1720±100	84.25±0.79 2140±20
	SL-V120H	2.76±0.79 70±20	20.08±3.94 510±100	37.80±3.94 960±100	55.12±3.94 1400±100	72.83±3.94 1850±100	90.55±0.79 2300±20

*1. Only one SL-V08H bracket can be installed.

Dimensions [Mounting bracket]

Standard mounting bracket J
OP-83180

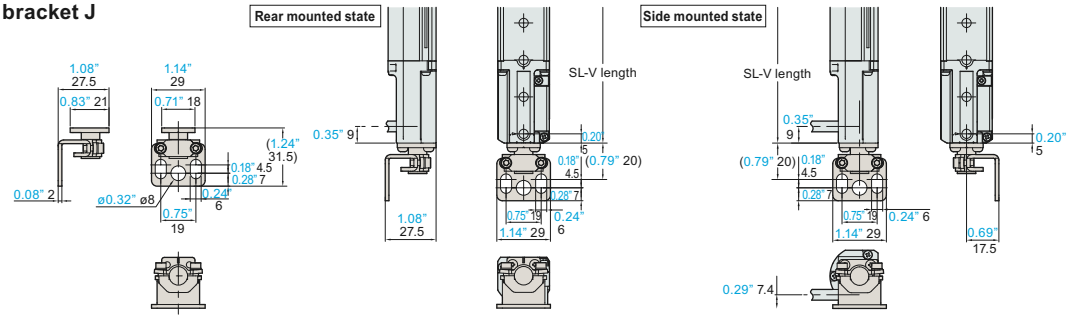

Standard mounting bracket A
OP-42347

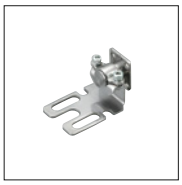

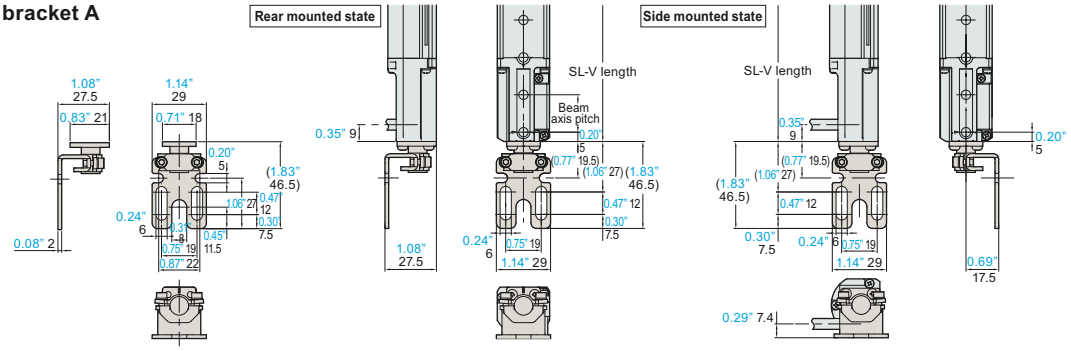

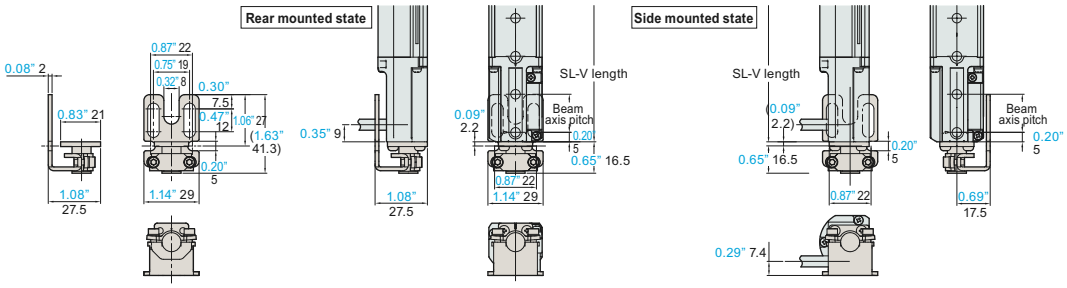

Standard mounting bracket B
OP-42348

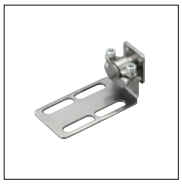

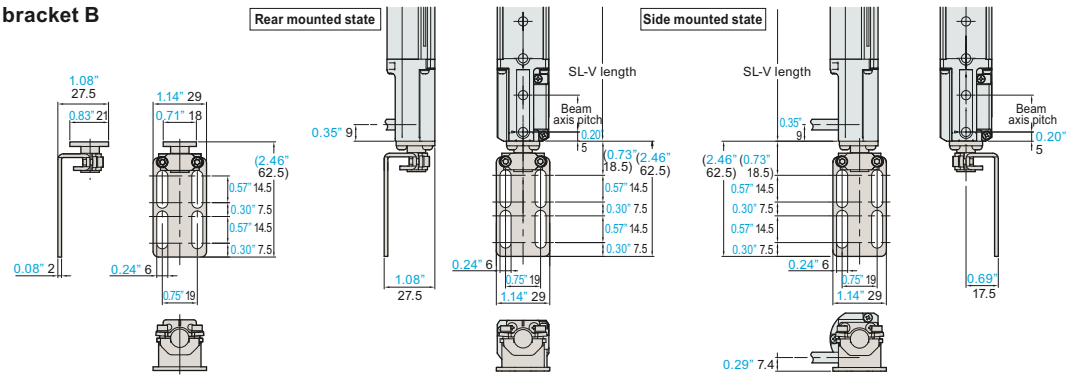

Standard mounting bracket C
OP-42349

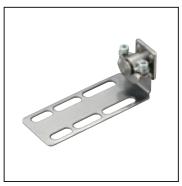

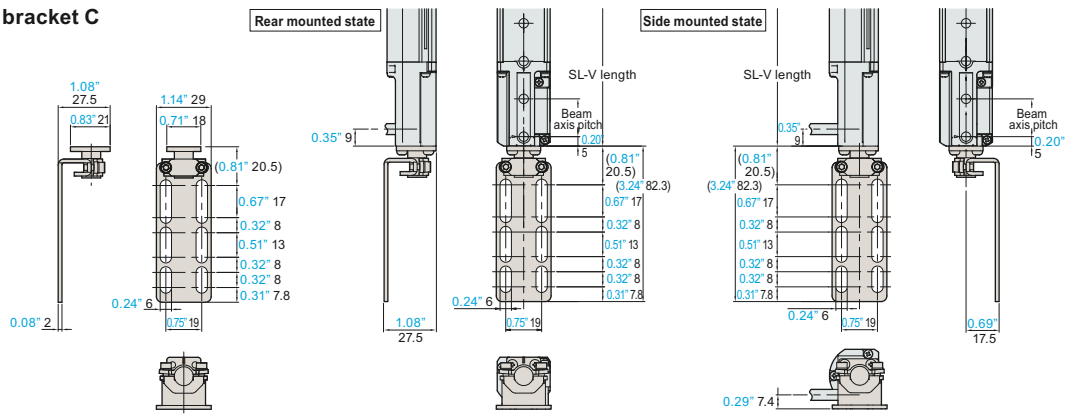

Slim mounting bracket
OP-51698

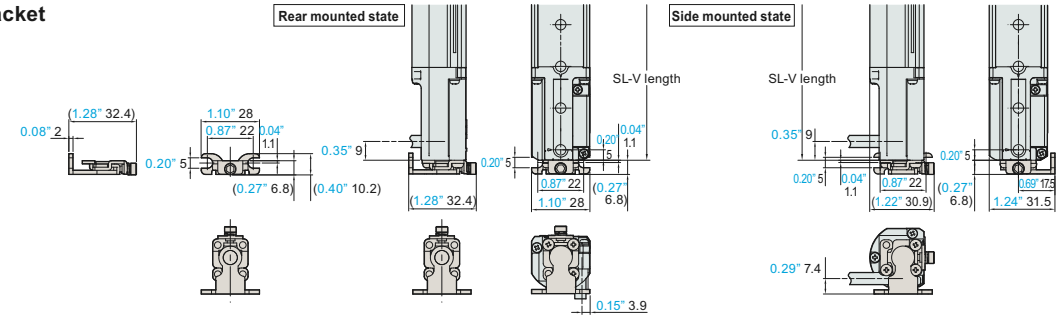

L-shaped mounting bracket
OP-42371

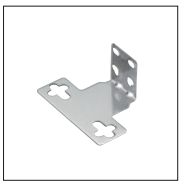

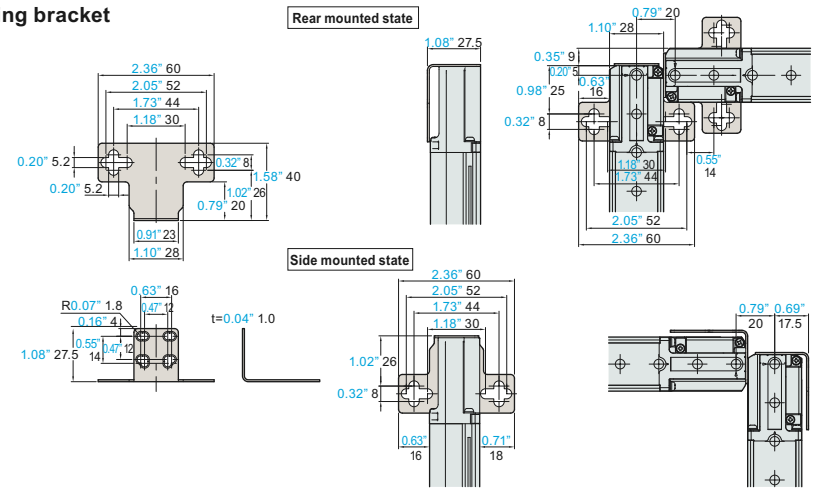

Compact E-to-E bracket
OP-83181

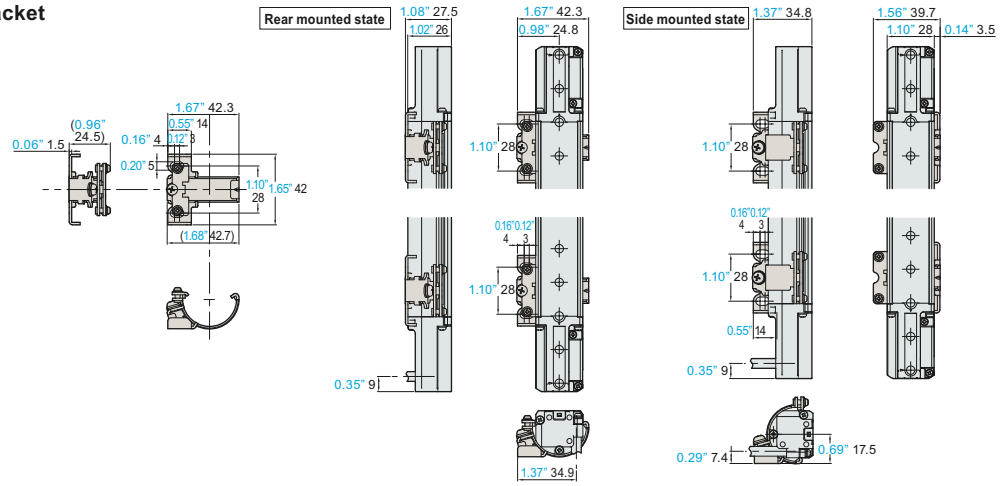

E-to-E bracket
OP-42370

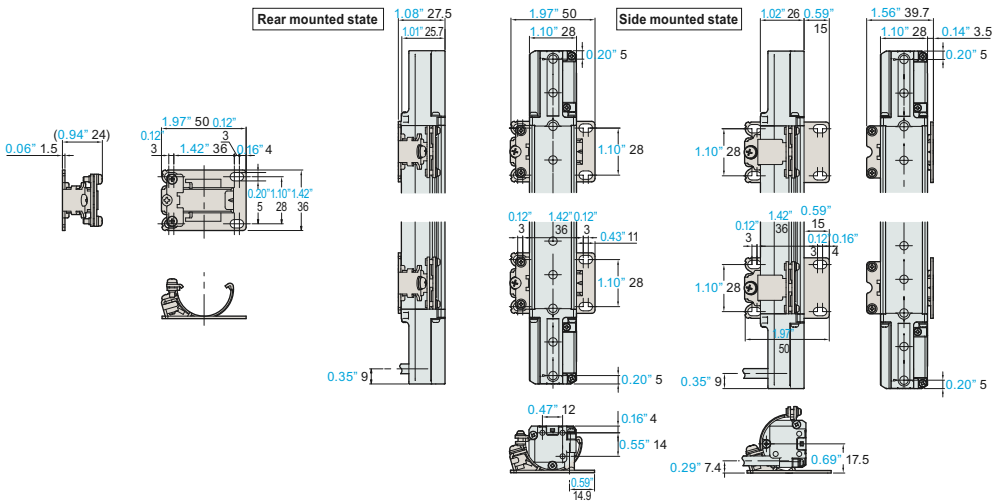

Dimensions [For the SL-VFM/VHM]

SL-VFM/VHM
[When using a standard mounting bracket]

Standard mounting bracket
OP-84259

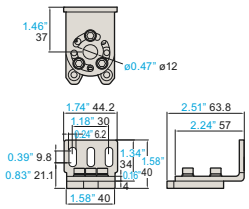

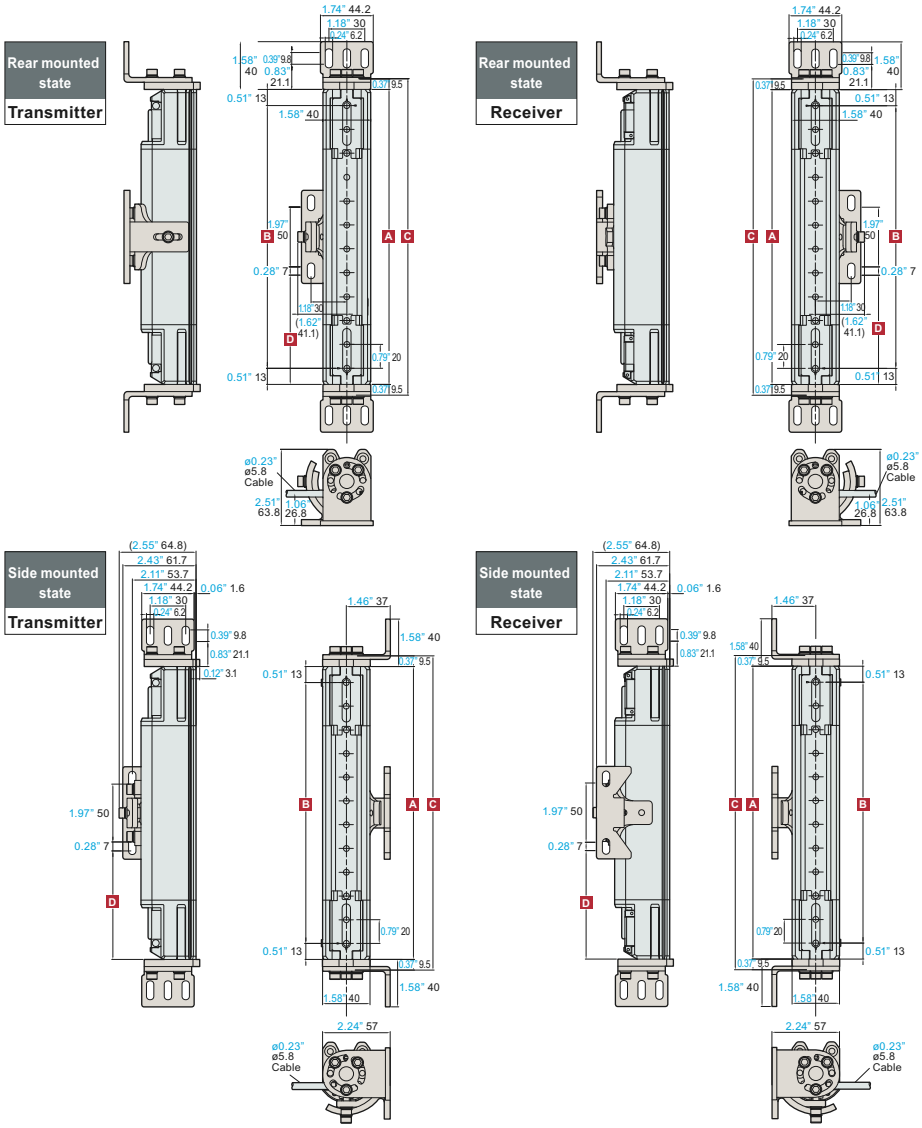

When using a standard mounting bracket [For the SL-VFM]

Unit: inch mm

Model	No. of axes	A Length	B Detection height	C Protection height	D Space-saving mounting bracket mounting position (for intermediate support)		
					1st	2nd	3rd
SL-V23FM	23	9.69" 246	8.66" 220	9.61" 244	Not required	Not required	Not required
SL-V31FM	31	12.83" 326	11.81" 300	12.76" 324			
SL-V39FM	39	15.98" 406	14.96" 380	15.91" 404			
SL-V47FM	47	19.13" 486	18.11" 460	19.06" 484			
SL-V55FM	55	22.28" 566	21.26" 540	22.20" 564			
SL-V63FM	63	25.43" 646	24.41" 620	25.35" 644			
SL-V71FM	71	28.58" 726	27.56" 700	28.50" 724	13.03"±1.97" 331±50		
SL-V79FM	79	31.73" 806	30.71" 780	31.65" 804	14.61"±1.97" 371±50		
SL-V87FM	87	34.88" 886	33.86" 860	34.80" 884	16.18"±1.97" 411±50		
SL-V95FM	95	38.03" 966	37.01" 940	37.95" 964	17.76"±1.97" 451±50		
SL-V103FM	103	41.18" 1046	40.16" 1020	41.10" 1044	12.48"±1.97" 317±50	26.22"±1.97" 666±50	
SL-V111FM	111	44.33" 1126	43.31" 1100	44.25" 1124	13.54"±1.97" 344±50	28.31"±1.97" 719±50	
SL-V119FM	119	47.48" 1206	46.46" 1180	47.40" 1204	14.57"±1.97" 370±50	30.39"±1.97" 772±50	
SL-V127FM	127	50.63" 1286	49.61" 1260	50.55" 1284	15.63"±1.97" 397±50	32.52"±1.97" 826±50	

*Space-saving brackets are required as intermediate support brackets as the unit becomes longer.

When using a standard mounting bracket [For the SL-VHM]

Unit: inch mm

Model	No. of axes	A Length	B Detection height	C Protection height	D Space-saving mounting bracket mounting position (for intermediate support)		
					1st	2nd	3rd
SL-V12HM	12	9.69" 246	8.66" 220	10.43" 265	Not required	Not required	Not required
SL-V16HM	16	12.83" 326	11.81" 300	13.58" 345			
SL-V20HM	20	15.98" 406	14.96" 380	16.73" 425			
SL-V24HM	24	19.13" 486	18.11" 460	19.88" 505			
SL-V28HM	28	22.28" 566	21.26" 540	23.03" 585			
SL-V32HM	32	25.43" 646	24.41" 620	26.18" 665			
SL-V36HM	36	28.58" 726	27.56" 700	29.33" 745	13.03"±1.97" 331±50		
SL-V40HM	40	31.73" 806	30.71" 780	32.48" 825	14.61"±1.97" 371±50		
SL-V44HM	44	34.88" 886	33.86" 860	35.63" 905	16.18"±1.97" 411±50		
SL-V48HM	48	38.03" 966	37.01" 940	38.78" 985	17.76"±1.97" 451±50		
SL-V52HM	52	41.18" 1046	40.16" 1020	41.93" 1065	12.48"±1.97" 317±50	26.22"±1.97" 666±50	
SL-V56HM	56	44.33" 1126	43.31" 1100	45.08" 1145	13.54"±1.97" 344±50	28.31"±1.97" 719±50	
SL-V60HM	60	47.48" 1206	46.46" 1180	48.23" 1225	14.57"±1.97" 370±50	30.39"±1.97" 772±50	
SL-V64HM	64	50.63" 1286	49.61" 1260	51.38" 1305	15.63"±1.97" 397±50	32.52"±1.97" 826±50	
SL-V72HM	72	56.93" 1446	55.91" 1420	57.68" 1465	12.99"±1.97" 330±50	27.20"±1.97" 691±50	41.46"±1.97" 1053±50
SL-V80HM	80	63.23" 1606	62.20" 1580	63.98" 1625	14.57"±1.97" 370±50	30.35"±1.97" 771±50	46.18"±1.97" 1173±50
SL-V88HM	88	69.53" 1766	68.50" 1740	70.28" 1785	16.14"±1.97" 410±50	33.50"±1.97" 851±50	50.91"±1.97" 1293±50
SL-V96HM	96	75.83" 1926	74.80" 1900	76.57" 1945	17.72"±1.97" 450±50	36.65"±1.97" 931±50	55.63"±1.97" 1413±50

*More space-saving brackets are required as intermediate support brackets as the unit becomes longer.

SL-VFM/VHM
[When using space-saving mounting brackets]

Space-saving mounting bracket
OP-84260

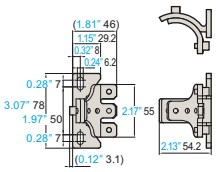

Rear mounted state
Transmitter

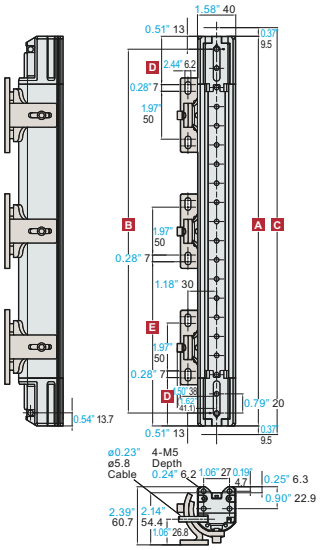

Rear mounted state
Receiver

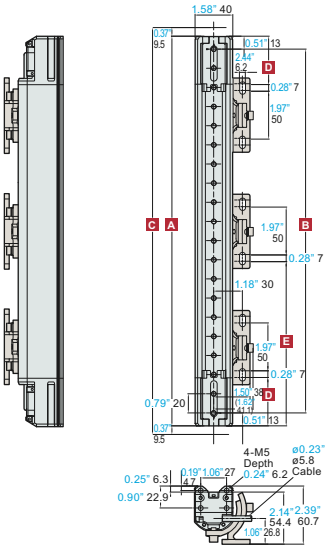

Side mounted state
Transmitter

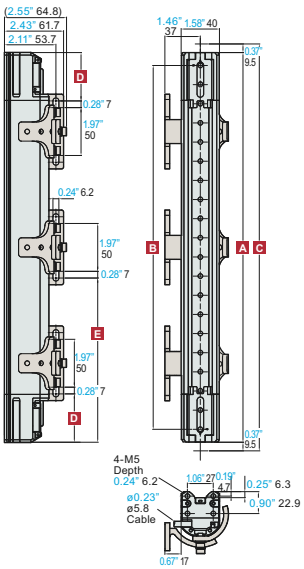

Side mounted state
Receiver

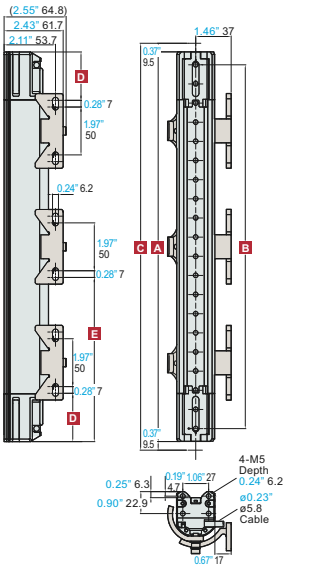

When using space-saving mounting brackets [For the SL-VFM]

Unit: inch mm

Model	No. of axes	A Length	B Detection height	C Protection height	D Mounting position	E Mounting position (for intermediate support) 1st	2nd	3rd
SL-V23FM	23	9.69" 246	8.66" 220	9.61" 244	2.36"±0.79" 60±20	Not required	Not required	Not required
SL-V31FM	31	12.83" 326	11.81" 300	12.76" 324				
SL-V39FM	39	15.98" 406	14.96" 380	15.91" 404				
SL-V47FM	47	19.13" 486	18.11" 460	19.06" 484				
SL-V55FM	55	22.28" 566	21.26" 540	22.20" 564				
SL-V63FM	63	25.43" 646	24.41" 620	25.35" 644				
SL-V71FM	71	28.58" 726	27.56" 700	28.50" 724		13.03"±1.97" 331±50		
SL-V79FM	79	31.73" 806	30.71" 780	31.65" 804		14.61"±1.97" 371±50		
SL-V87FM	87	34.88" 886	33.86" 860	34.80" 884		16.18"±1.97" 411±50		
SL-V95FM	95	38.03" 966	37.01" 940	37.95" 964		17.76"±1.97" 451±50		
SL-V103FM	103	41.18" 1046	40.16" 1020	41.10" 1044		12.48"±1.97" 317±50	26.22"±1.97" 666±50	
SL-V111FM	111	44.33" 1126	43.31" 1100	44.25" 1124		13.54"±1.97" 344±50	28.31"±1.97" 719±50	
SL-V119FM	119	47.48" 1206	46.46" 1180	47.40" 1204		14.57"±1.97" 370±50	30.39"±1.97" 772±50	
SL-V127FM	127	50.63" 1286	49.61" 1260	50.55" 1284		15.63"±1.97" 397±50	32.52"±1.97" 826±50	

*Space-saving brackets are required as intermediate support brackets as the unit becomes longer.

When using space-saving mounting brackets [For the SL-VHM]

Unit: inch mm

Model	No. of axes	A Length	B Detection height	C Protection height	D Mounting position	E Mounting position (for intermediate support) 1st	2nd	3rd
SL-V12HM	12	9.69" 246	8.66" 220	10.43" 265	2.36"±0.79" 60±20	Not required	Not required	Not required
SL-V16HM	16	12.83" 326	11.81" 300	13.58" 345				
SL-V20HM	20	15.98" 406	14.96" 380	16.73" 425				
SL-V24HM	24	19.13" 486	18.11" 460	19.88" 505				
SL-V28HM	28	22.28" 566	21.26" 540	23.03" 585				
SL-V32HM	32	25.43" 646	24.41" 620	26.18" 665				
SL-V36HM	36	28.58" 726	27.56" 700	29.33" 745		13.03"±1.97" 331±50		
SL-V40HM	40	31.73" 806	30.71" 780	32.48" 825		14.61"±1.97" 371±50		
SL-V44HM	44	34.88" 886	33.86" 860	35.63" 905		16.18"±1.97" 411±50		
SL-V48HM	48	38.03" 966	37.01" 940	38.78" 985		17.76"±1.97" 451±50		
SL-V52HM	52	41.18" 1046	40.16" 1020	41.93" 1065		12.48"±1.97" 317±50	26.22"±1.97" 666±50	
SL-V56HM	56	44.33" 1126	43.31" 1100	45.08" 1145		13.54"±1.97" 344±50	28.31"±1.97" 719±50	
SL-V60HM	60	47.48" 1206	46.46" 1180	48.23" 1225		14.57"±1.97" 370±50	30.39"±1.97" 772±50	
SL-V64HM	64	50.63" 1286	49.61" 1260	51.38" 1305		15.63"±1.97" 397±50	32.52"±1.97" 826±50	
SL-V72HM	72	56.93" 1446	55.91" 1420	57.68" 1465		12.99"±1.97" 330±50	27.20"±1.97" 691±50	41.46"±1.97" 1053±50
SL-V80HM	80	63.23" 1606	62.20" 1580	63.98" 1625		14.57"±1.97" 370±50	30.35"±1.97" 771±50	46.18"±1.97" 1173±50
SL-V88HM	88	69.53" 1766	68.50" 1740	70.28" 1785		16.14"±1.97" 410±50	33.50"±1.97" 851±50	50.91"±1.97" 1293±50
SL-V96HM	96	75.83" 1926	74.80" 1900	76.57" 1945		17.72"±1.97" 450±50	36.65"±1.97" 931±50	55.63"±1.97" 1413±50

*More space-saving brackets are required as intermediate support brackets as the unit becomes longer.

Dimensions [For SC-S11]

SC-S11

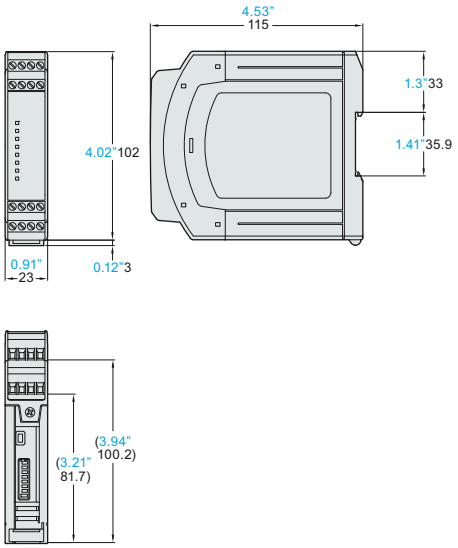

Dimensions [SL-T11R/U2]

SL-T11R

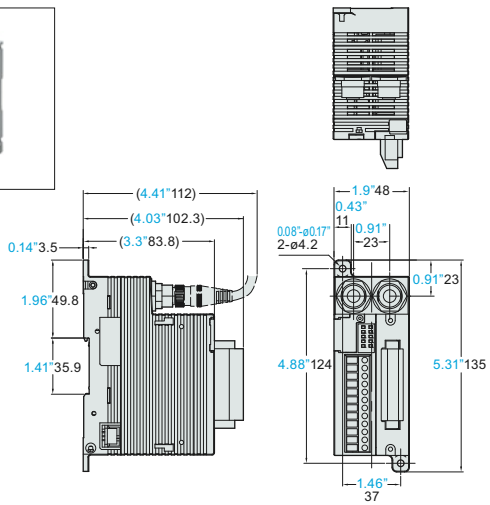

SL-U2

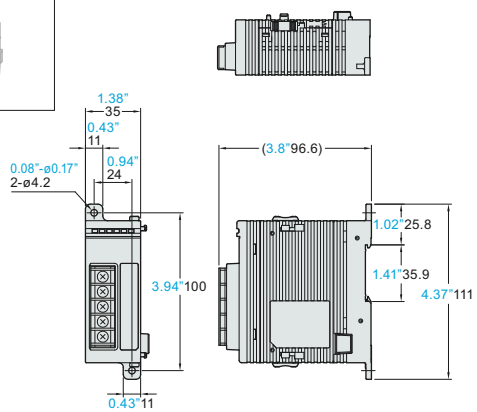

KA1-1017

SLV-KA-C3-US 1035-8 611224