KEYENCE

Multi-Purpose CCD Laser Micrometre

IG Series

A Wide Variety of Application Modes for Easy, High-Accuracy Measurements

LASER EDGE SENSOR

Intelligent sensor

I-SERIES

Low-cost High Performance

Thrubeam Digital Laser Sensor with the Highest Level of Stability

REPEATABILITY OF 5 µm
LINEARITY OF ± 0.1% (IG-028)

The sensor provides a high level of stability with its multi-wavelength laser and parallel computing chip.

WIDE VARIETY OF APPLICATION MODES

- Edge control mode
- Outer diameter measurement mode
- Inner diameter/Gap measurement mode
- Edge detection of transparent targets

POSITION MONITOR

Measurements are performed with up to 28,000 optical axes (IG-028), each of which monitors the amount of light received.

Large Distance between the Transmitter and Receiver

IG-028: Max. 1500 mm IG-010: Max. 1000 mm

L-CCD* Light-Receiving Element

The sensor recognises the position of a target and is less sensitive to its environment, making it possible to achieve stable target measurement.

* L-CCD : Linearised-Charge Coupled Device

IP67 Protection

The enclosure is resistant to harsh environments and offers long-term durability.

Display Unit Options

There are two types of display units: panel mount and DIN-rail mount. When a display unit is connected to a communication unit, measurement data can be sent to external devices such as a PLC.

Panel mount type
IG-1500/1550

DIN-rail mount type
IG-1000/1050

Intelligent sensor I-SERIES

THREE CONCEPTS

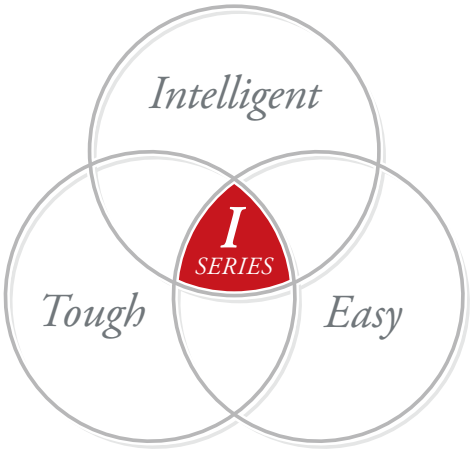

Intelligent

High accuracy was achieved by using the technology and functions developed for high-accuracy measuring instruments.

Tough

Developed for use in harsh environments, the IG Series was designed with a strong structure.

Easy

Excellent usability makes it possible to quickly and easily perform stable measurements without any difficult adjustments and settings.

The intelligent I-Series consists of a high-accuracy sensor lineup that realises low-cost high performance with only the most advanced functions for on-site operations.

Low-cost High Performance

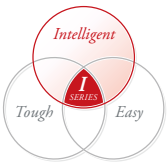

High stability and measurement accuracy are achieved with the newly developed optical system

Multi-Wavelength Laser + I-DSP

With conventional lasers, the transmission spot produces a patchy pattern (as shown in the figure to the right). This is a laser-specific interference problem caused by the laser having a single wavelength. The IG Series sensor overcomes this problem by using a multi-wavelength laser. Because shadows are formed on the CCD more clearly, the sensor remains highly stable, even with targets that are conventionally difficult to detect (e.g. transparent objects). With the I-DSP (a parallel computing chip) incorporated in the receiver, the sensor can perform data processing at high speed, reducing noise to a minimum.

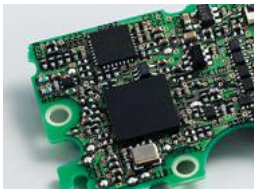

SPOT IMAGE

Single-wavelength laser (conventional laser sensor)

A patchy pattern appears.

Multi-wavelength laser (IG)

Due to the multi-wavelength laser used, the beam pattern has a more uniform intensity distribution.

Best in its class

Repeatability of 5 µm

Best in its class

Linearity of ±0.1%

STABLE DETECTION OF TRANSPARENT & MESH TARGETS

The L-CCD makes it possible to detect a target based on its position. Edge control and positioning of transparent and mesh targets can be performed stably.

Transparent target

Mesh target

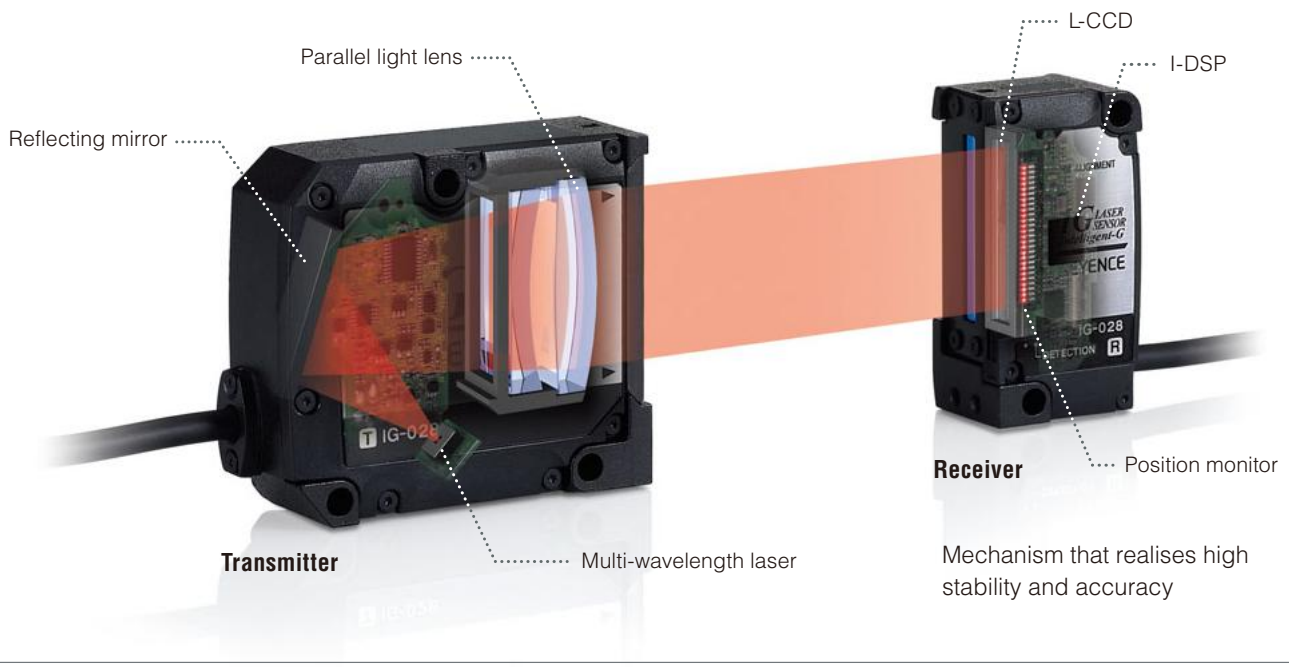

Mechanism that realises high stability and accuracy

Extremely easy to use due to the built-in position monitor

Determining the Part of a Target to be Measured

The position monitor on the IG Series sensors makes it possible to visually check how a target is detected. The user can prevent mounting or setting errors by observing the red lights that indicate the received light position and the green lights that indicate the measurement position.

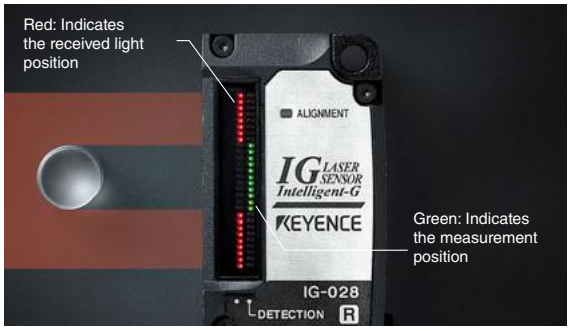

Easier Optical Axis Alignment

The position monitor makes it easier to align the optical axis. Easily perform optical axis alignment by adjusting the sensor head so that all of the position monitor lights turn red.

Optical axis alignment in progress

Optical axis alignment complete

FUNCTION AND STRUCTURE THAT MATCHES THE ON-SITE ENVIRONMENT

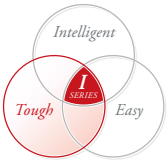

Easy to maintain thanks to excellent environment resistance

Key Point: Less Sensitive to Dirt

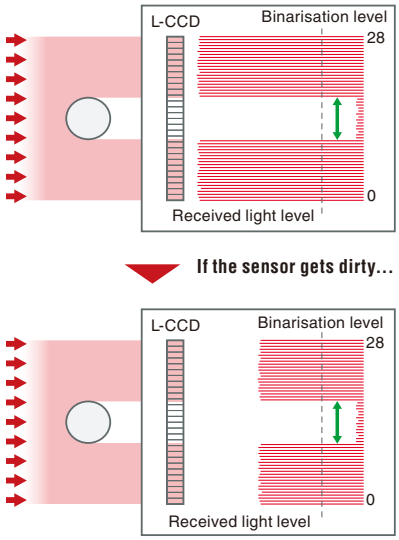

Although dirt reduces the total amount of light received, the measurement position is the same. The shadow of a target is shown.

Because it uses an L-CCD, the IG Series is less sensitive to materials such as dirt than a sensor that uses a photodiode (PD) as the light-receiving element.

IP67 Protection

The enclosure satisfies the IP67 rating based on the IEC standards and remains watertight even after being held at a depth of one metre for 30 minutes. The enclosure is resistant to adverse environments and offers long-term durability.

Flexible Free-Cut Cable

The sensor head cable is a robot cable that withstands repeated bending. The cable can be used safely in a position requiring repeated motion.

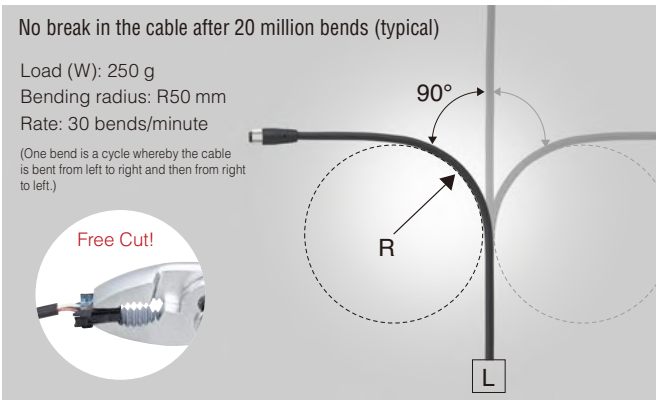

Edge Check Function

The user can check whether a measurement is performed correctly by verifying the number of edges in the field of view.

Example

- Prevent dust or oil from adhering to the measurement unit, which can cause an abnormal measurement value.
- Detect the intrusion of a different type of target.
- Check that a measurement target falls within the measurement range.

EASY SETTING WITH THE APPLICATION MODES

Three major application modes

The measurement area is automatically specified simply by selecting the mode.

Edge Control and Positioning Mode

The distance from the end of the measurement range to the edge of a target is measured.

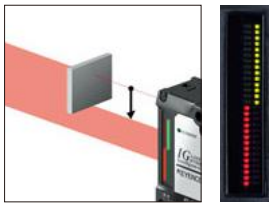

Outer Diameter/ Width Measurement Mode

The outer diameter or width of a target is measured.

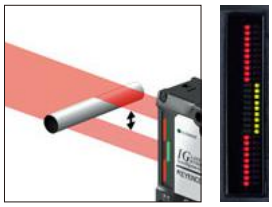

Inner Diameter/ Gap Measurement Mode

The inner diameter of a target or a gap between targets is measured.

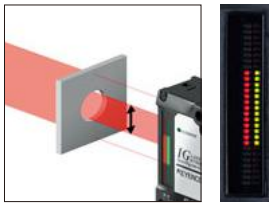

Five dedicated modes can be selected according to the application

Edge Detection of Transparent Targets

The edges of transparent objects such as glass have low transparency which decreases the amount of light received. The IG Series detects edges exploiting this nature and automatically changes a measurement sensitivity appropriately to detect a transparent target.

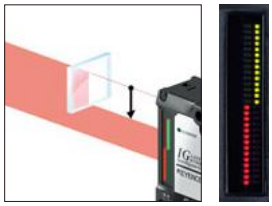

Edge detection algorithm + glass edge mode

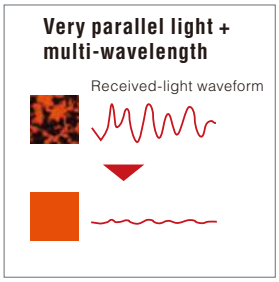

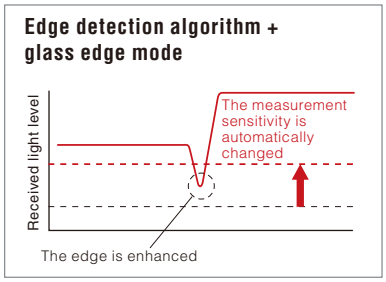

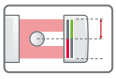
Pin position measurement mode

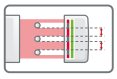
Pin pitch judgement mode

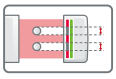
Pin diameter judgement mode

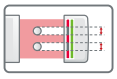
Specified edge-to-edge distance measurement mode

BUILT-IN CALCULATION FUNCTIONS ALLOW FOR AN EVEN WIDER VARIETY OF APPLICATIONS

Edge Control and Positioning Mode + Control output

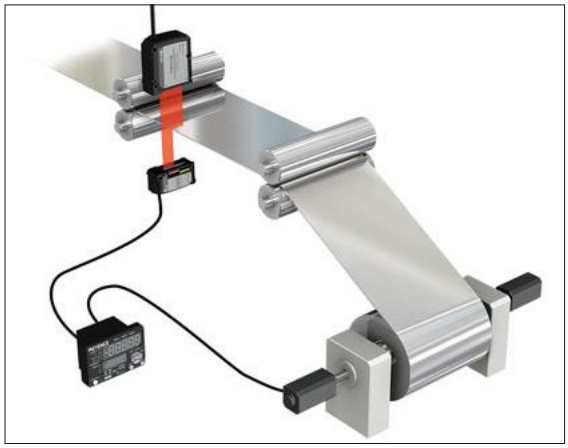

Feedback control using edge position control

Positioning control of the θ angle of a wafer

Easy control when used with a servomotor (example)

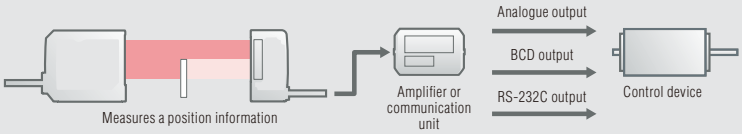

Outputs the edge position information to a control device. It is possible to send the information via an analogue output, BCD output, or RS-232C output according to the type of the control device instead of using a PLC.

Glass Edge Mode + Calculation function

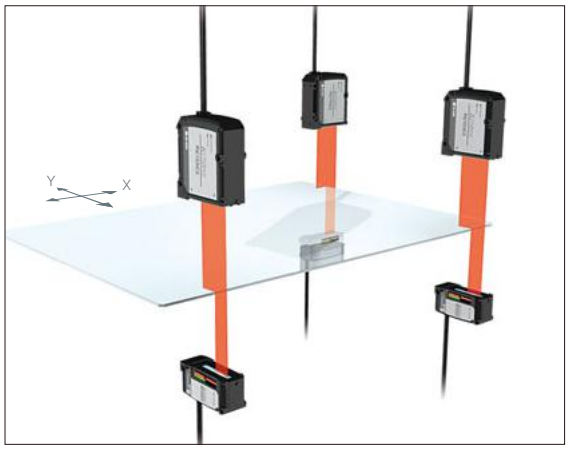

Positioning of a glass substrate

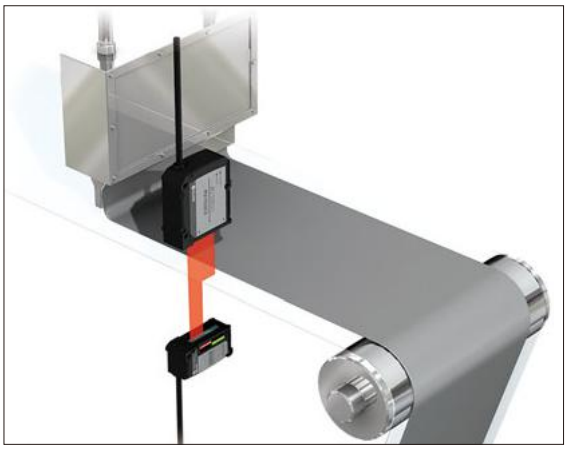

Edge control of a transparent sheet

Easy measurement with the calculation function

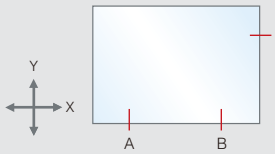

Main unit — **A–B :** Misalignment measurement
Expansion unit 1 — **B :** Y-axis position measurement
Expansion unit 2 — **C :** X-axis position measurement

The main unit of the amplifier can communicate with the expansion units. When positioning an object such as a panel, it is possible to calculate a misalignment amount by calculating the data obtained by two sensor heads.

Outer Diameter/Width Measurement Mode + Calculation function

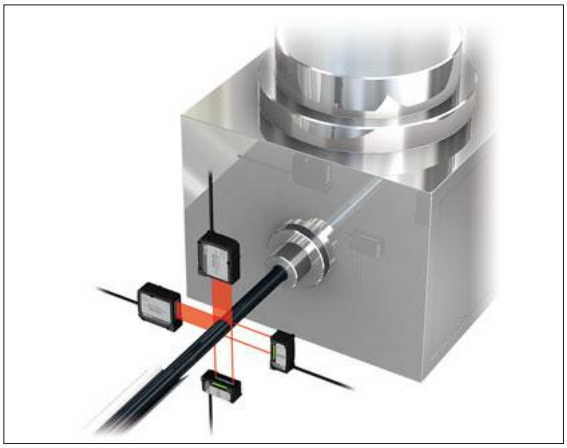

Outer diameter/deformation measurement of an extrusion

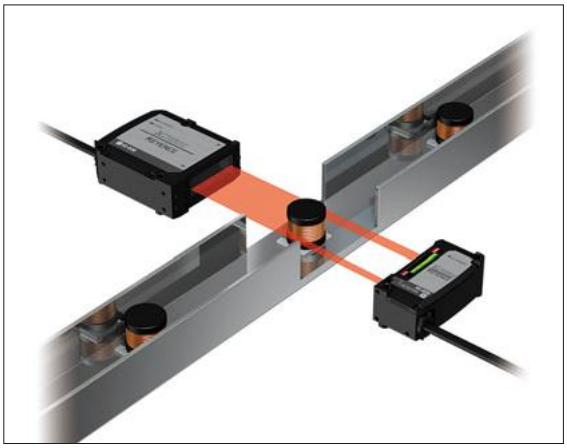

Outer diameter measurement of a part

Easy measurement with the calculation function

A-B: Deformation measurement
B : Outer diameter measurement

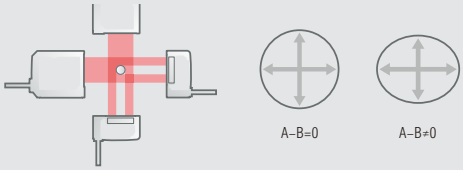

Abnormal diameters and deformations can be detected in real time by measuring a tube in two axes. The 980 µs high-speed sampling detects even tiny abnormalities.

Inner Diameter/Gap Measurement Mode + Calculation function

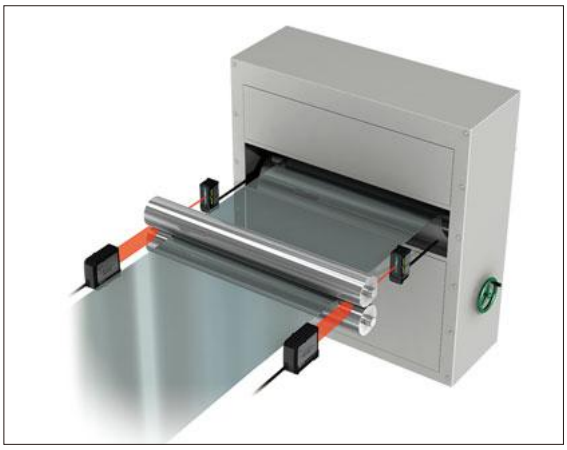

Gap measurement between rollers

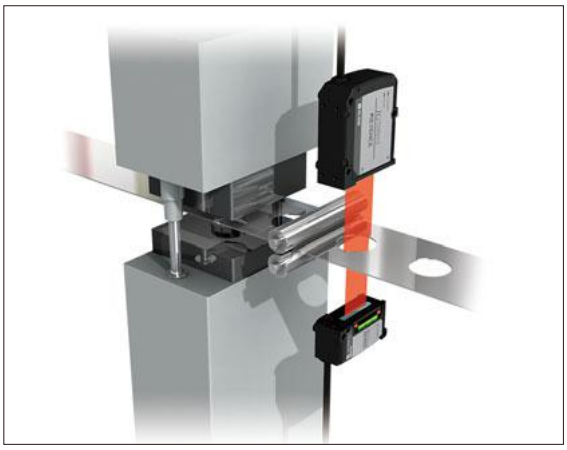

Diameter check of press cutting

Easy measurement with the calculation function

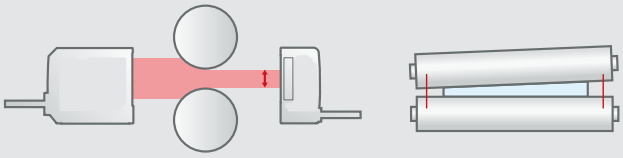

The thickness of a product can be controlled by measuring the gaps of the two sides between the rollers.

EVEN MORE USEFUL WHEN CONNECTED TO A PC

The configuration software, IG Configurator, allows for a wide range of settings to be made including the monitoring of the waveforms of received light and the measurement modes.

Reading and Writing Settings

The user can enter all settings including the measurement modes into a PC and then transfer them to the sensor. The management of setting data is simple and very convenient when two or more sensors are used.

Monitoring Function

Measurement conditions such as the waveforms of received light can be displayed in real time. The mounting and sensitivity settings can also be adjusted more precisely.

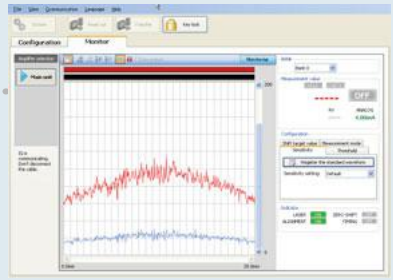

Calculation Function

Addition mode (if a measurement target is large)

SETTING EXAMPLE 1
(length)

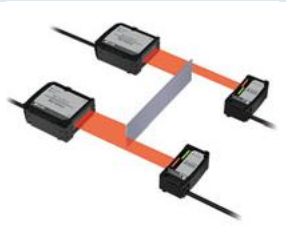

SETTING EXAMPLE 2
(width)

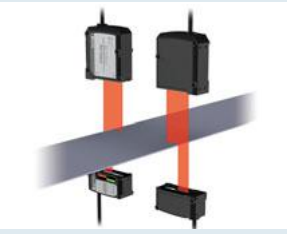

Subtraction mode (to measure the difference in level or inclination)

SETTING EXAMPLE 1
(inclination)

SETTING EXAMPLE 2
(difference in thickness)

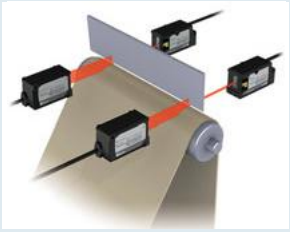

Sensitivity Setting

The set value used to judge whether light enters or is blocked, based on the amount of light received by the CCD, is called the binarisation level. The amount of light received when the reference waveform is registered is regarded as the 100% level. The light is judged to be blocked if the amount of light is less than the specified binarisation level. The IG Series initially sets a binarisation level of 25% and the user can change the level according to the application.

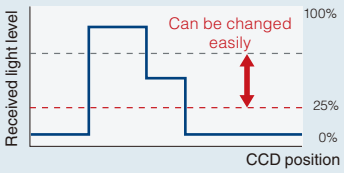

Zero Shift Function

This function shifts an internal measurement value to 0 (to offset the value). When the target value is changed, this function can be used to shift an internal measurement value to the new target value.

DATA COMMUNICATION

Amplifier Function

NPN/PNP Output Selection (judgement selection)

Both NPN and PNP outputs are supported. The outputs are set the first time the user turns on the power. These settings can subsequently be changed. Judgements are output as HIGH, GO, or LOW.

Bank Function

The bank function can register up to four patterns of specific settings.* For example, in response to a measurement target changeover, this function allows the user to easily switch between the patterns of registered settings.

* HIGH setting value, LOW setting value, binarisation level, shift target value, etc.

Analogue Output Selection

The following four types of analogue outputs can be selected. The output is selected the first time the user turns on the power.

Setting value	Description
oFF	Not output
0-5u	Analogue output after the judgement value is converted to the range from 0 to 5 V.
-5-5u	Analogue output after the judgement value is converted to the range of ±5 V.
1-5u	Analogue output after the judgement value is converted to the range from 1 to 5 V.
4APr	Analogue output after the judgement value is converted to the range from 4 to 20 mA.

The setting can be changed.

Communication Unit

Open field network communication units

Achieving great wire-saving with the new open field network communication units

DL Series

Model	Appearance	Communication method	Connection device
¥DL-EC1A		EtherCAT®	PLCs
DL-PN1		PROFINET	PLCs
DL-EP1		EtherNet/IP™	PLCs
DL-DN1		DeviceNet™	PLCs

Model	Appearance	Communication method	Connection device
DL-PD1		PROFIBUS	PLCs
DL-EN1		TCP/IP	PLCs Computers
DL-RS1A		RS-232C	PLCs Computers
DL-RB1A		BCD-Output	PLCs Computers

EtherCAT® is registered trademark and patented technology, licensed by Beckhoff Automation GmbH, Germany.

Lineup

Sensor heads

IG-010

Measurement range	10 mm
Mounting distance	0 to 1000 mm
Repetition accuracy	5 μm *1 (Setting distance: 100 mm)
Linearity	±28 μm *1

IG-028

Measurement range	28 mm
Mounting distance	0 to 1500 mm
Repetition accuracy	5 μm *1 (Setting distance: 100 mm)
Linearity	±28 μm *1

*1 For the detailed conditions, refer to "Specifications" (page 12).

Display units (amplifiers)

DIN rail mount type

IG-1000
Main unit

IG-1050
Expansion unit

Panel mount type

IG-1500
Main unit

IG-1550
Expansion unit

Sensor head cables

Appearance	Cable length	Model	Weight
	2 m*2	OP-87056	Approx. 80 g
	5 m	OP-87057	Approx. 190 g
	10 m	OP-87058	Approx. 360 g
	20 m	OP-87059	Approx. 680 g

The cable is common to the transmitter and receiver, and can be used with either of them.
*2 Two cables are included with a sensor head.

This connector is required if the cable is cut.

Connector used to connect to a display unit (2 pcs.)
OP-84338

Optional

	Type	Model	Appearance	Description	Weight
PC software*1	IG Configurator	IG-H1		–	Approx. 80 g
Sensor head mounting brackets*2	For IG-010	IG-TB01		–	Approx. 50 g
	For IG-028	IG-TB02		–	Approx. 40 g
Optional accessories for the display unit	End unit (Optional)	OP-26751		To connect an additional expansion unit, use the end units to secure the display units on both ends. When connecting additional units, be sure to use the end units. (2 pcs.) 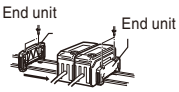	Approx. 15 g
	Panel front protection cover [Included in panel mount type amplifier]	OP-87076		The panel front protection cover and panel mounting bracket are included in the panel mount type amplifier. If the supplied cover or bracket is lost or damaged, purchase a new one.	Approx. 6 g
	Panel mounting bracket [Included in panel mount type amplifier]	OP-4122			Approx. 7 g
	Expansion cable: 300 mm	OP-35361		Extension cable used for panel mount type amplifier. Use this cable if the standard 50 mm cable is not long enough.	Approx. 10 g
Optional accessories for the communication unit				Although the DL Series is designed for the DIN-rail mount type only, the optional expansion cable (OP-35361, 300 mm) enables communication with the panel mount type display unit. 	
	DIN-rail mounting bracket	OP-60412		The mounting bracket is used when the expansion cable is used to connect to the panel mount type display unit, in which case a DIN rail is not provided.	Approx. 12 g

*1 The DL-RS1A communication unit is required.
*2 The screws for connecting the sensor head and bracket are included.

Specifications

Sensor heads

Model		IG-010	IG-028
Appearance			
Operation principle		CCD method	
Light source		Visible light semiconductor laser (Wavelength:660 nm)	
	FDA (CDRH) Part 1040.10	Class 1 Laser Product*1	
	IEC60825-1	Class 1 Laser Product	
Mounting distance		0 to 1000 mm	0 to 1500 mm
Measurement range		10 mm	28 mm
Sampling cycle		980μs (When the number of times for averaging is set to [hsp]: 490μs)	
Minimum detectable object *2	High sensitivity mode	ø0.1 mm (Setting distance: 100 mm)	
	Standard mode	ø0.2 mm (Setting distance: 40 mm), ø0.5 mm (Setting distance: 500 mm)	ø0.2 mm (Setting distance: 50mm), ø0.5 mm (Setting distance: 500 mm)
Repeatability *3		5 μm (Setting distance: 100 mm) 10 μm (Setting distance: 500 mm) 80 μm (Setting distance: 1000 mm)	5 μm (Setting distance: 100 mm) 10 μm (Setting distance: 500 mm) 80 μm (Setting distance: 1000 mm) 140 μm (Setting distance: 1500 mm)
Linearity *4		±0.28 % of F.S. (±28 μm)	±0.1 % of F.S. (±28 μm)
Temperature characteristics *5		±0.03 % of F.S./°C (±3 μm/°C)	±0.01 % of F.S./°C (±3 μm/°C)
Operation indicator	Transmitter	Optical axis alignment indicator: Green LED Power indicator: Green LED	
	Receiver	Optical axis alignment indicator: Green LED Position monitor: Dual bar LED (Red, Green)	
Environment resistance	Enclosure rating	IP67	
	Ambient temperature	-10 to +45°C (No freezing)	
	Ambient humidity	35 to 85% RH (No condensation)	
	Ambient light *6	Incandescent lamp: 5000 lux Sunlight: 5000 lux	
	Vibration resistance	10 to 55 Hz Double amplitude 1.5 mm XYZ each axis: 2 hours	
	Pollution degree	2	
Material	Case	Zinc die-cast (Lower case), PBT (Upper case), Polyarylate (PAR) (Display part), SUS304 (Metallic part)	
	Lens cover	Glass	
	Cable	PVC	
Supplied item		Transmitter × 1, Receiver × 1, Sensor head cables (2 m) × 2	
Weight (including supplied items)		Approx. 380 g	Approx. 500 g

*1 The classification for FDA (CDRH) is implemented based on IEC60825-1 in accordance with the requirements of Laser Notice No.50.
*2 When the measurement target object is measured at the centre position of the setting distance.
When the measurement mode is set to the glass edge mode, a glass edge of C0.1 mm or more can be detected (Setting distance: 500 mm).
*3 When the light is shielded by half at the centre position of the setting distance. Vibration width when the average number of times is set to 16 and sampling is performed for 30 seconds.
(When the analogue output is used, the margin of error of analogue output is added.)
*4 When the setting distance is 100 mm and light is shielded at 50 mm position from the receiver. Margin of error to the ideal line.
*5 When the setting distance is 100 mm and light is shielded by half at 50 mm position from the receiver.
*6 Excluding when the average number of times is set to [hsp].

Display unit (amplifier)

Model		IG-1000	IG-1050	IG-1500	IG-1550
Appearance					
Amplifier type		DIN rail mount		Panel mount	
Main unit/Expansion unit		Main unit	Expansion unit	Main unit	Expansion unit
Analogue output		Yes	No	Yes	No
Power supply voltage		10-30 VDC, Ripple (P-P): 10% included, Class 2 or LPS			
Power consumption (including analogue current output)	Normal	2700 mW or less (at 30 V: 90 mA or less)		2880 mW or less (at 30 V: 96 mA or less)	
	Power saving function (HALF)	2300 mW (at 30 V: 77 mA or less)			
	Power saving function (ALL)	2200 mW (at 30 V: 74 mA or less)			
Digital display method		Dual 7-seg display Upper level: Red, 5 digits Lower level: Green, 5 digits		Dual 7-seg display Upper level: Red/Green, 2 colours, 5 digits Lower level: Green, 5 digits	
Display range		-99.999 to +99.999, -99.99 to +99.99, -99.9 to +99.9, -99 to +99 (selectable)			
Display resolution		1 µm, 10 µm, 100 µm, 1000 µm(selectable)			
Output	Judgement output (selectable between NPN and PNP)	NPN (PNP) open collector x3ch, 30 VDC (Power supply voltage) or less, residual voltage 1 V (2 V) or less, N.O./N.C. selectable Max. 50 mA/ch *1			
	Response time (judgement output)	1.96 to 4031.72 ms *2			
	Edge check output (selectable between NPN and PNP)	NPN (PNP) open collector x1ch, 30 VDC (Power supply voltage) or less, residual voltage 1 V (2 V) or less, N.O./N.C. selectable Max. 50 mA, *1 response time 20 ms			
	Analogue output (selectable among ±5V, 1-5 V, 0-5 V, 4-20 mA)				

	Voltage output	Current output
Output range	±5 V (full scale 10 V)	4-20 mA (full scale 16 mA)
Output resistance	100 Ω	–
Maximum load resistance	–	350 Ω
Repetition accuracy	±1 mV	±1.5 µA
Display accuracy	±0.05 % of F.S.	±0.25 % of F.S.
Temperature characteristics	±0.005 % of F.S./°C	±0.01% of F.S./°C
Update cycle	Same as sensor head sampling cycle	
Response time	Same as Response time (judgement output)	
Time constant *3	10 µs (90 % response)	30 µs (90 % response)

Input	Gain input	Input time: 20 ms or more, Response delay time: 120 ms or less (Nonvolatile memory (EEPROM) 1.5 s or less)
	Reset input	Input time: 20 ms or more, Response delay time: 20 ms or less
	Timing input	Input time: 2 ms or more, Response delay time: 2 ms or less
	Zero shift input	Input time: 20 ms or more, Response delay time: 20 ms or less
	Bank A input/Bank B input	Input time: 20 ms or more, Response delay time: 20 ms or less *2
	Laser emission stop input	Input time: 2 ms or more, Response delay time: 2 ms or less
Environment resistance	Ambient temperature	-10 to +50°C (No freezing)
	Ambient humidity	35 to 85%RH (No condensation)
	Vibration resistance	10 to 55 Hz Double amplitude 1.5 mm XYZ each axis: 2 hours
	Pollution degree	2
Material		Main unit case/Front sheet: Polycarbonate, Key top: Polyacetal, Cable: PVC
Supplied item		Main body × 1, Instruction manual × 1 (only for main unit) / Main body × 1, Panel mounting bracket × 1, Front protection cover × 1, Power supply and input/output cable (2 m) × 1, Expansion cable (50 mm) × 1 (only for expansion unit), Instruction manual × 1 (only for main unit)
Weight (including supplied items)		Approx. 150 g / Approx. 140 g / Approx. 170 g / Approx. 165 g

*1 When expansion units are added: Max. 20 mA/ch
*2 For more details, refer to the User's Manual.
*3 Delay time that occurs from the analogue output circuit after the judgement is output.

Dimensions

Unit : mm

Sensor head

IG-010

Transmitter

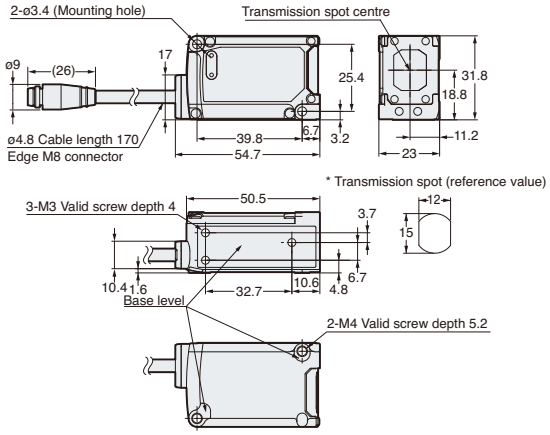

Receiver

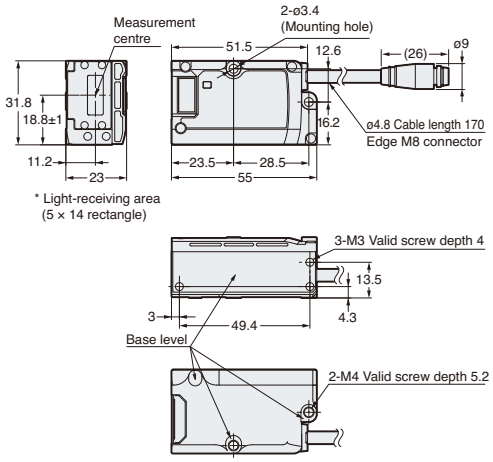

IG-028

Transmitter

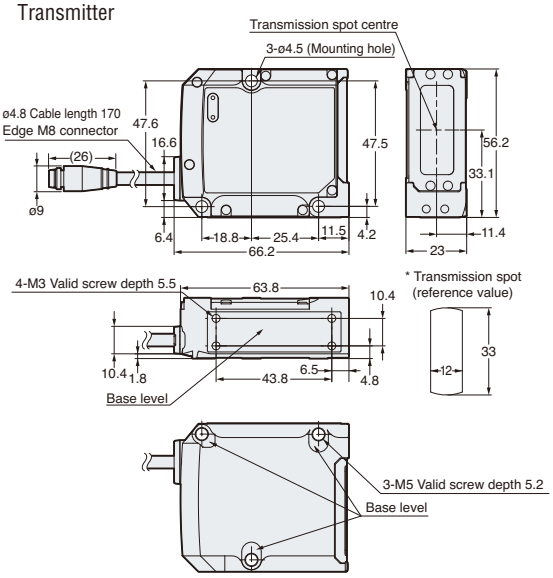

Receiver

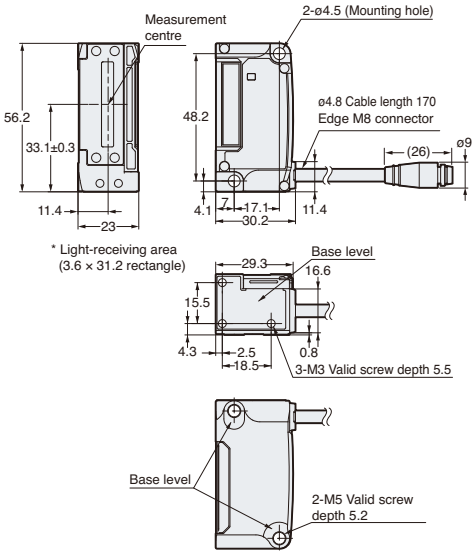

Sensor head mounting bracket

IG-TB01 + IG-010

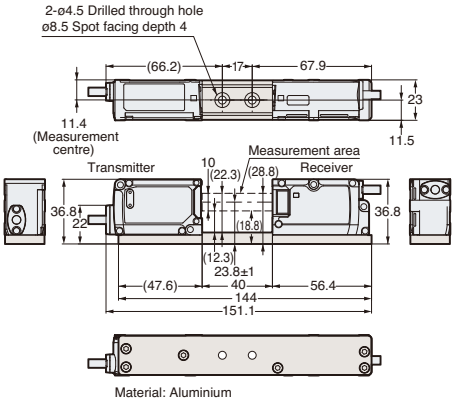

Material: Aluminium

IG-TB02 + IG-028

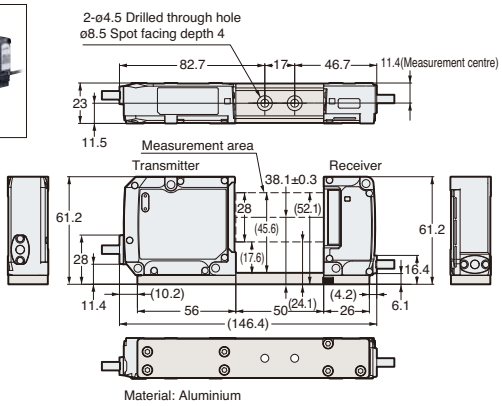

Material: Aluminium

Dimensions

Unit : mm

Sensor amplifier (DIN rail mount type)

IG-1000/IG-1050

IG-1000

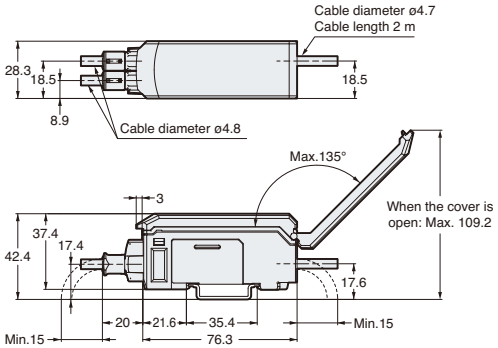

IG-1050

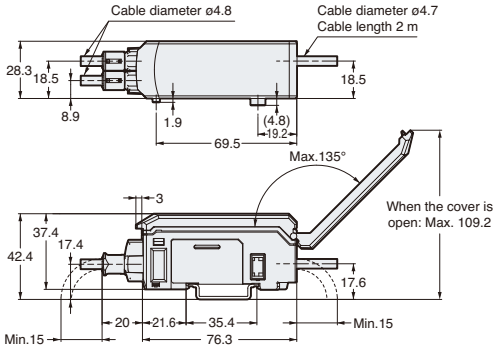

Sensor amplifier (Panel mount type)

IG-1500/IG-1550

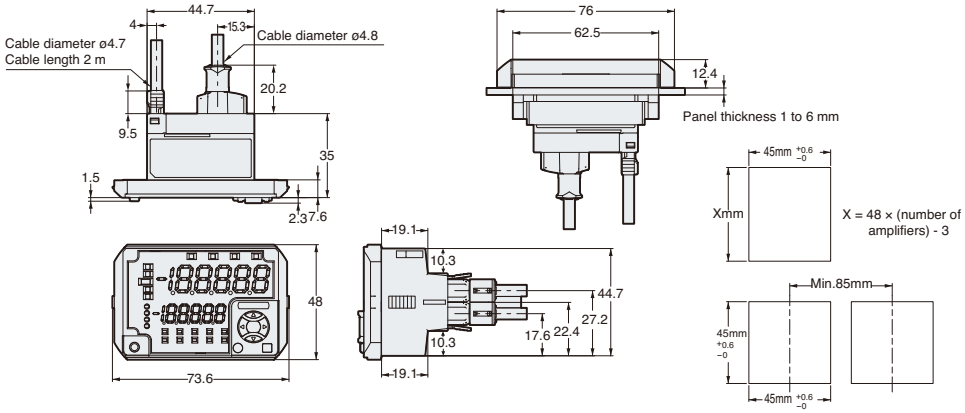

Notes on connecting a panel mount type expansion unit

Place the main unit in the top position, and bring the expansion unit into contact with the main unit vertically. For horizontal connection of the panel mount type, the optional expansion cable OP-35361 (300 mm) type is required.

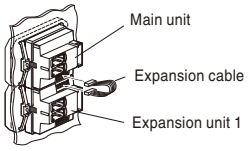

End unit (Optional) (2 pcs.)

OP-26751

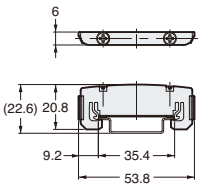

Wiring Diagram

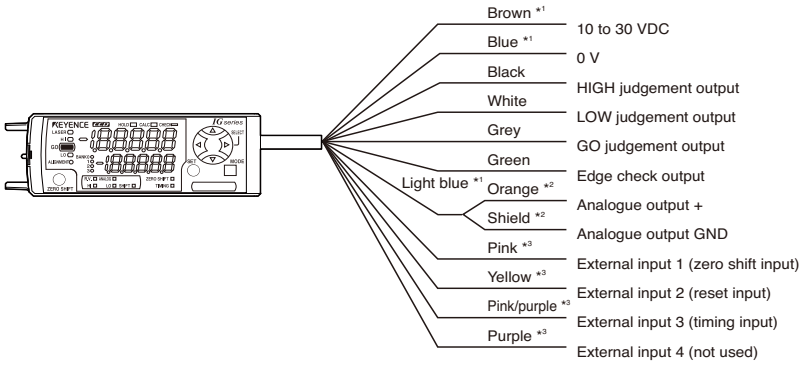

*1 The brown, blue, and light blue cables are not provided in a IG-1050/IG-1550 unit (expansion unit).
The power is supplied to the expansion unit from the IG-1000/IG-1500 unit (main unit).
*2 For an analogue output, OFF (not used), 0 to 5 V, ±5 V, 1 to 5 V, or 4 to 20 mA can be selected.
*3 For an external input, bank A input, bank B input, laser emission stop input, or OFF (not used) can also be selected.
For external input 4, gain input can also be selected.
For details, refer to the User's Manual.

Specifications

EtherCAT® Network communication unit DL-EC1A

Model		DL-EC1A
EtherCAT® Specifications	Compatible functions	Process data object communication (cyclic communication)
		Mailbox communication (message communication) CoE compatible
	Conformance test	Complies with V2.0.42

PROFINET Network communication unit DL-PN1

Model		DL-PN1
PROFINET specifications	Device type	Data I/O Communication
		Record data Communication
	Number of connections	1
	Update time	2 to 512 ms
	GSDML Version	Ver. 2.3
	Conformance class	Conformance Class A
	Conformance test	V2.2.4
	Compliant protocol	LLDP, DCP

PROFIBUS DP Network communication unit DL-PD1

Model		DL-PD1
PROFIBUS DP specifications	Device type	DP-V1 Slave (D-sub 9 pin, Number of the ports: 1)
	Communication speed	9.6 kbps to 12 Mbps
	Cable length	9.6 / 19.2 / 45.45 / 93.75 kbps : 1200 m 187.5 kbps : 1000 m, 500 kbps : 400 m 1.5 Mbps : 200 m, 3 / 6 / 12 Mbps : 100 m

EtherNet/IP™ Network communication unit DL-EP1

Model		DL-EP1
EtherNet/IP™ Specifications	Compatible Functions	Cyclic Communication
		Message communication (Explicit messaging) Compatible with UCMM and Class 3
	Number of connections	64
	RPI (Transmission cycle)	0.5 to 10000 ms (0.5 ms unit)
	Tolerable communication bandwidth for cyclic communication	6000 pps
	Conformance Test	Compatible with Version A7

DeviceNet™ communication unit DL-DN1

Model		DL-DN1		
DeviceNet™ Specifications	Compatible functions	Input/Output communication (poll)/ Explicit Message Communication		
	Address Settings	0 to 63 (PGM compatible)		
	Communication speed (Automatic switching method)	500 kbps	250 kbps	125 kbps
	Maximum cable length	100 m (thick cable)	250 m (thick cable)	500 m (thick cable)
		100 m (thin cable)	100 m (thin cable)	100 m (thin cable)
	Network power source	11 to 25 VDC (DeviceNet™ provided from the communication power source)		

CC-Link Network communication unit DL-CL1

Model		DL-CL1
CC-Link specifications	Compatible versions	Ver. 2.00 / Ver. 1.10 (selectable)
	Number of occupied stations	Ver. 2.00: 1 station, 8× / 2 stations, 8× / 4 stations, 2×; (selectable) Ver. 1.10: 1 / 2 / 4 stations (selectable)
	Type of station	Remote device station
	Transmission rate	156 kbps / 625 kbps / 2.5 Mbps / 5 Mbps / 10 Mbps
	Setting of station numbers	1 to 64

TCP/IP Network communication unit DL-EN1

Model		DL-EN1
Ethernet Specifications	Transmission rate	100Mbps (100BASE-TX)
	Transmission medium	STP cable or Category 5 or higher UTP cable (100BASE-TX)
	Maximum cable length	100 m (Distance between DL-EN1 and Ethernet switch)
Performance specifications	Socket communication, no-protocol commands, ASCII	TCP socket 1

RS-232C Network communication unit DL-RS1A

Model		DL-RS1A
RS-232C Specifications	Communication Method	Full duplex
	Synchronization Method	Start-stop
	Transmission Code	ASCII
	Baud rate	2400/4800/9600/19200/38400 bps

BCD Network communication unit DL-RB1A

Model		DL-RB1A
BCD Output Specifications	Input/Output Terminal	34 pin connector (MIL Standard)
	Control Output	BCD Output: 4 (1 column) × 6 columns, signal output, strobe output, alarm output NPN Open collector 40 V, 20 mA or less, residual voltage 1 V or less Positive logic / Negative logic can be switched
	Control Input	ID Selection Input: 4, data request input Non-voltage input, input time 2 ms or more, short circuit current 1 mA

Dimensions

Unit : mm

DL-EC1A

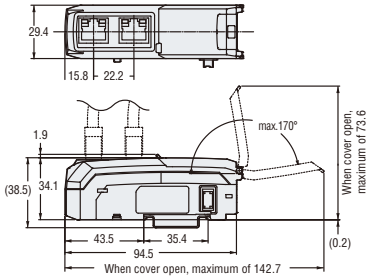

DL-PD1

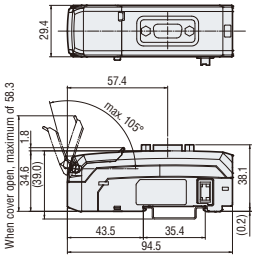

DL-PN1/EP1/EN1

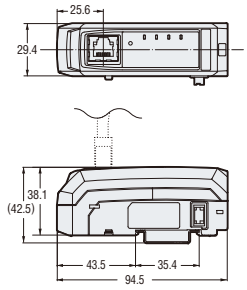

DL-DN1

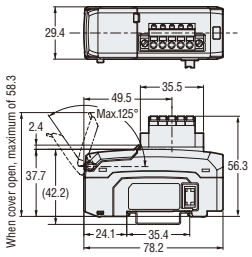

DL-RS1A

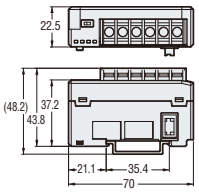

DL-CL1

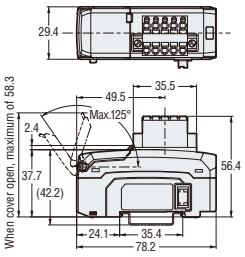

DL-RB1A

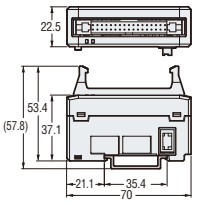

KEYENCE

Please visit: www.keyence.com

SAFETY INFORMATION
Please read the instruction manual carefully in order to safely operate any KEYENCE product.

GLOBAL NETWORK CONTACT YOUR NEAREST OFFICE FOR RELEASE STATUS

AUSTRIA
Phone: +43-2236-378266-0

BELGIUM
Phone: +32-15-281-222

BRAZIL
Phone: +55-11-3045-4011

CANADA
Phone: +1-905-366-7655

CHINA
Phone: +86-21-5058-6228

CZECH REPUBLIC
Phone: +420-222-191-483

FRANCE
Phone: +33-1-56-37-78-00

GERMANY
Phone: +49-6102-3689-0

HONG KONG
Phone: +852-3104-1010

HUNGARY
Phone: +36-1-802-73-60

INDIA
Phone: +91-44-4963-0900

INDONESIA
Phone: +62-21-2966-0120

ITALY
Phone: +39-02-6688220

JAPAN
Phone: +81-6-6379-2211

KOREA
Phone: +82-31-789-4300

MALAYSIA
Phone: +60-3-7883-2211

MEXICO
Phone: +52-55-8850-0100

NETHERLANDS
Phone: +31-40-20-66-100

PHILIPPINES
Phone: +63-(0) 2-981-5000

POLAND
Phone: +48-71-36861-60

ROMANIA
Phone: +40-269-232-808

SINGAPORE
Phone: +65-6392-1011

SLOVAKIA
Phone: +421-25939-6461

SLOVENIA
Phone: +386-1-4701-666

SWITZERLAND
Phone: +41-43-455-77-30

TAIWAN
Phone: +886-2-2721-8080

THAILAND
Phone: +66-2-369-2777

UK & IRELAND
Phone: +44 (0) 1908-696-900

USA
Phone: +1-201-930-0100

VIETNAM
Phone: +84-4-3772-5555

WW1-1037
IG-WW-C-GB 1028-10 600699